Mobile County Engineering Department

HANDOUT

EXAMPLES OF:

Asphalt QC/QA
Bituminous Price Adjustment
HMA Fuel Cost Adjustment
Daily Concrete Placement Report

MOBILE COUNTY ENGINEERING DEPARTMENT

QC/QA – BITUMINIOUS ADJUSTMENTS – HMA ADJUSTMENTS

EXAMPLE
QC/QA PACKET

MOBILE COUNTY ENGINEERING DEPARTMENT
QC/QA LOT COVER SHEET

PROJECT No. MCP-303-10 PROJECT NAME: Rock Road

ENGINEERING: Mobile County Engineering CONTRACTOR: Esfeller Construction

LOT NUMBER 1 DATE OF PLACEMENT: 4/11/11

ITEM	COMPLETED BY	COMPLETED AT	ENGINEERS OFFICE (✓)	ENGINEERS OFFICE ( )
COVER SHEET	ENGINEER	OFFICE	✓	
BMT-4	INSPECTOR	PROJECT	✓	
BMT-19	ENGINEER	OFFICE	✓	
BMT-20	CONTRACTOR	PLANT	✓	
BMT-20	TESTING LAB	PLANT	✓	
BMT-97	ENGINEER	OFFICE	N/A	
QC/QA-1	ENGINEER	OFFICE	✓	
QC/QA-3	ENGINEER	OFFICE	✓	
MC-LS-1 & 2	INSPECTOR	PROJECT	✓	
MC-CDW	TESTING LAB	PLANT	✓	
MC-26-1, 2, & 3	ENGINEER	OFFICE	✓	
MC-27-1, & 2	ENGINEER	OFFICE	✓	
ASPHALT TICKETS (copies only)	ENGINEER	OFFICE	✓	
ADDING MACHINE TAPE (copies only)	ENGINEER	OFFICE	✓	

Form BMT-4

Revised 4-29-11

MOBILE COUNTY PUBLIC WORKS
ENGINEERING DEPARTMENT

GDBP PROJECTS ONLY PLANT MIX DAILY PLACEMENT REPORT

Date 4/11/11

Project No. Mcp-303-10 Project Name Rock Road

Contractor Esfeller Construction Total Tons in Contract 410 tons

Producer H.O. Weaver

Weather Today Sunny Low 65 °F High 81 °F

~~Tack~~ Prime Coat

Placed ~~Today:~~ 4/6/11 STA 61+00 STA 39+00

Length: 2200 ft **Width:** 22 ft , **Area:** 5377.78 sq.yds.

Today: 1218.75 gallons **Rate:** 0.226 gallons per sq.yds.

From Previous Report: Ø gallons Ø sq.yds.

To Date: 1218.75 gallons 5377.78 sq.yds.

Plant Mix

Asphalt Placed Today: 203.96 Tons 407,920.00 lbs.

Previous Report: Ø Tons **Delivery Temp:** 305 °F Highest 290 °F Lowest

To Date: 203.96 Tons 407,920.00 lbs.

Pay Item Number: 429-A **Mix No.** 1/2 **Lot No.** 1

Yield Each 1000 S.Y. (Approximate) This Date

Yeild	STA	STA	Length	Width	SQ.YD.	Tons	Pounds	Rate (lbs/sqyd)	Required Rate
1	61+00	52+50	850	10'	944.44	76.96	153,920.0	162.97	165
2	52+50	39+00	1350	10'	1500.00	127.00	254,0000	169.33	165
3									
4									
5									
6									
7									
8									
9									
10									

Example Only

Remarks

Inspector Kenneth Ellison **Project Engineer**

Terracon

BMT-19

ALABAMA DEPARTMENT OF TRANSPORTATION
WORKSHEET SUMMARY OF LOT TEST RESULTS
AIR VOIDS and AC CONTENT

Project No. MCP-303-10 Rock Road

Pay Item No. 429-A

County Mobile

Mix No. 1/2"

% AC Content Required: 5.50

% Air Voids: 4.00

Lot No. 1

Date: 4/11/2011

AC Content					Air Voids			
Testing Increm.	Contractor	State	Ref. St/Contr	Dev.:	Contractor	State	Ref. St/Contr	Dev.:
1		5.30		0.20		4.09		0.09
2								
3								
4								
			Average:	0.2			Average:	0.09

Pay Factors: AC Content: 1.00

Air Voids: 1.00

Lot No.

Date:

AC Content					Air Voids			
Testing Increm.	Contractor	State	Ref. St/Contr	Dev.:	Contractor	State	Ref. St/Contr	Dev.:
1								
2								
3								
4								
			Average:				Average:	

Pay Factors: AC Content:

Air Voids:

Project Number : MCR 2006 316

Project Name : SMITH, ROCK, ETC

Form BMT-20

MOBILE COUNTY PUBLIC WORKS
ENGINEERING DEPARTMENT
ASPHALT PLANT MIXTURE TEST REPORT

CONTRACTOR TESTING X

DEPARTMENTAL TESTING

Pay Item No. 429A Mix No. 1/2" Lot No. 3 Date(s) Sampled 11-Apr-11

Producer Hosea O. Weaver & Sons, Inc. THEODORE Date(s) Tested 11-Apr-11

Tons Produced (This Report) 654.23 TONS

Prime Contractor: ESFELLER Paving Contractor: ESFELLER

ANALYSIS

Sample Number		1	2	3	4	5	6
Time Sampled							
Loading Temperature, C°							
Sieve	Job Mix Gradation (% Passing)						
37.5 mm (1 1/2 inch)							
25 mm (1 inch)							
19mm (3/4 inch)							
12.5 mm (1/2 inch)	100	100					
9.5 mm (3/8 inch)	97	96					
4.75 mm (no. 4)	67	61					
2.36 mm (no. 8)	45	42					
1.18 mm (no. 16)	34	30					
600 um (no. 30)	25	22					
300 um (no. 50)	12	11					
150 um (no. 100)	7	7					
75 um (no. 200)	5.4	4.5					
Percent Asphalt Req'd. (Total Sample)	5.50%	5.50%					
Percent Asphalt (Total Sample)		5.30%					
Dust / Asphalt Ratio		0.88%					
Rice Gravity		2.478					
AIR VOIDS		4.09%					
VMA (%)		16.6%					
CRUSHED PARTICLES		85%					
STABILITY		2117					
FLOW		11.0					
ROSS COUNT (%)		NA					

MIXING TEMPERATURE	
TRUCK #	LOADING TEMP F°

REMARKS:

MCP-308-10

210.16 TONS COUNTY MIX REPORTED TO TERRICON

444.07 TONS REPORTED TO THOMPSON

Copies : Division
Project Engineer
File

John C Holden
Certified Technician

BMT-20
REV. 4-1-01

ALABAMA
DEPARTMENT OF TRANSPORTATION
ASPHALT PLANT MIXTURE TEST REPORT

Contractor Testing
Departmental Testing xxxxxx

PROJECT No. MCP-303-10
Rock Road
County Mobile
Division 9TH
Lab No.

Pay Item No. 429-A Mix No. 1/2" Lot No. 1 Date(s) Sampled 4/11/2011

Producer H. O. Weaver @ Hamilton Blvd. Date(s) Tested 4/11/2011

Tons Produced (this report): 210.16 - 6.20 = 203.96

Prime Contractor: Esfeller Paveing Contractor: Esfeller

ANALYSIS

Sample Number		1	2	3	4	5	Remarks:
Time Sampled							
Loading Temp.							*Out of Spec.
Sieve	Job Mix Gradation (% Passing)						#6.20 TONS WENT TO PROJECT MCP-2006-316 203.96 PAYABLE
37.55mm (1 1/2")							
25.0mm (1")							
19.0mm (3/4")							
12.5mm (1/2")	100	100					
9.5mm (3/8")	97	96					
4.75mm (No. 4)	67	61					
2.36mm (No. 8)	45	42					
1.18mm (No. 16)	34	30					
600um (No. 30)	25	22					
300um (No. 50)	12	11					
150um (No. 100)	7	7					
75um (No. 200)	5.4	4.5					
Percent Asphalt Req'd. (Total Sample)		5.50					
Percent Asphalt (Total Sample)		5.30					
Dust/Asphalt Ratio		0.88					
Rice Gravity		2.478					
Air Voids (%)		4.09					
VMA (%)		16.6					
Crushed Particles		85%					
Stability (kN) (lbs)		2117					
Flow (.3mm) (in.)		11					

Copies:

Leroy Bayley FOR PHILLIP DOWNEY
Technician

Form QC/QA-1

Revised 04/11

Mobile County Engineering Department
Summary of Adjusted Tonnage

Project Number	County	Division
MCP-303-10	Mobile	9th

Contractor	Contract Bid Price (per ton)
Esfeller Construction	85.00$

Pay Item Number	Mix Number
429-A	1/2"

Lot Number	Tonnage Placed	Asphalt Content		Air Voids		Pay Factor Cores	* Referee Test Needed
		Number of Tests	Pay Factor	Number of Tests	Pay Factor		
1	203.96	1	1.0	1	1.0	1.0	

The Department to enter Yes or No, If No, enter pay factors on QC/QA-3. If Yes, indicate which characteristics, I.e, AC(asphalt content), AV(air voids) or MD(mat density).
Example: Yes - AV. Where refree testing is required, use QC/QA-2

Sheet No. 1 **of** 1

Form QC/QA-3

Revised 04/11

Mobile County Engineering Department
Summary of Adjusted Tonnage

Project Number MCP-303-10	**County** Mobile	**Division** 9th
Contractor Esfeller Construction	**Contract Bid Price (per ton)** 85.00$	
Pay Item Number 429-A	**Mix Number** 1/2"	

Lot Number	(1) Tonnage Placed	(2) Pay Factor Asphalt Content	(3) Pay Factor Air Voids	(4) Pay Factor Cores	(5) Tonnage At No Pay	(6) Adjusted Tonnage*
1	203.96	1.0	1.0	1.0	Ø	203.96

(6) = (1) x ((2)* or (3)* or (4)*)
(5) = (1) - (6)

*Apply Only The Lowest Numerical Pay Factor

Sheet No. ____ of ____

MC-LS-1 REVISED 2-27-08

ITEM #: 429A

PROJECT NO. MCP-303-10

DATE: 4/11/2011

CONTRACTOR: EsFeller

DESCRIPTION: WEARING SURFACE 165 lbs/sqyd, 1/2" mix, range B

Load #	WIDTH	STA	STA	SQ. YD	SQ. YD DAY	1000 SQYD	TICKET #	TRUCK #	TONS	TONS DAY	TONS DATE	YIELD	YIELD DAY	1000 SY RATE
1	10.00	61 + 00	58 + 75	250.00	250.00		4165087	86	24.92	24.92	24.92	199.36		
2	10.00	58 + 75	55 + 75	333.33	583.33		5088	71	26.04	50.96	50.96	156.24		
3	10.00	55 + 75	52 + 50	361.11	944.44	944.44	5089	21	26.00	76.96	76.96	144.00		162.97
4	10.00	52 + 50	49 + 50	333.33	1,277.77		5091	99	26.07	103.03	103.03	156.42		
5	10.00	49 + 50	46 + 50	333.33	1,611.10		5090	98	25.09	128.12	128.12	150.54		
6	10.00	46 + 50	44 + 00	277.78	1,888.88		5092	92	25.17	153.29	153.29	181.22		
7	10.00	44 + 00	41 + 50	277.78	2,166.66		5093	83	25.32	178.61	178.61	182.30		
8	10.00	41 + 50	39 + 00	277.78	2,444.44	1,500.00	5094	87	25.35	203.96	203.96	182.52	166.88	169.33

Terracon

Form MC-CDW

Mobile County Public Works
CORE DENSITY WORKSHEET

Project No. MCP-303-10
Lot No. 1 and 2
Road Name: Rock Road
Producer H. O. Weaver
Prime Contractor: Esfeller
Date(s) Tested 4/13/2011
Paveing Contractor: Esfeller

Type Mix: 429-A Wearing Surface 1/2" Mix

FORMULA

Bulk Specific Gravity = A / (B-C)

Where:
A = Wt. of speciman in air
B = Wt. of surface dry specimen in air
C = Wt. of specimen in water

% Density = Bulk Specific Gravity / Rice Gravity x 100

Core #	Station	Lane	Thick.	A	B	C	Bulk Sp. Gravity	Rice Gravity	% Density
C-1	59+75 L	6.9 EOP	1-3/4"	652.9	654.6	370.6	2.300	2.475	92.9 ✓
C-3	54+50 R	6.2 EOP	1"	414.9	415.6	233.6	2.277	2.475	92.0 ✓

Leroy Bailey
Technician

Project Engineer

Example Only

FORM MC-26-1 REV. 2-27-08

MOBILE COUNTY PUBLIC WORKS DEPARTMENT

Bituminous Material Price Adjustments

Project No. **MCP-303-10**
County: **Mobile**

Base Index for Asphalt Cement (Ib1) = **$2.120**
Base Index for Emulsified and Cutback Asphalt (Ib2) = **$2.060**
Month and Year of Base Index = **May-10**

Definitions:

P = Total Partial Payment on Monthly Estimate.
P1 = Partial Payment for Asphalt Cement.
P2 = Partial Payment for Emulsified and Cutback Asphalts.
Ib1 = Base Index for Asphalt Cement.
Ib2 = Base Index for Emulsified and Cutback Asphalts.
Im1 = Monthly Index for Asphalt Cement.
Im2 = Monthly Index for Emulsified and Cutback Asphalts.
G1 = Gallons of Asphalt Cement used during the month.
G2 = Gallons of Emulsified and Cutback Asphalt used during the month.
D1 = Algebraic Difference (Im1-Ib1).
D2 = Algebraic Difference (Im2-Ib2).

Refer to Specification Section 109.03(e).

	Month	Year	(1) G1	(2) G2	(3) Im1	(4) Im2	(5)* D1	(6)* D2	(7) P1	(8) P2	(9) P
LOT 1	April	2011	2157	1219	2.19	2.10	0.07	0.04	150.99	48.76	199.75

(7)=(1)*(5)
(8)=(2)*(6)
(9)=(7)+(8)

*NOTE
A "positive" D1 or D2 indicates payment to the Contractor.
A "negative" D1 or D2 indicates payment to the State.

5/2/2011

Form MC-26-2 REV. 2-27-08

MOBILE COUNTY PUBLIC WORKS DEPARTMENT

MONTH PLACED Apr-11

PROJECT NO. MCP-303-10
COUNTY Mobile

BASE INDEX $2.120
MONTHLY INDEX $2.190

BITUMINOUS MATERIAL PRICE ADJUSTMENT WORKSHEET

ITEM NO.	% Virgin A.C. *	% Virgin A.C. x 2000 = lb/ton	Tonnage Placed During Month	lb of A.C. Placed During Month	Gallons A.C. For Month **
429-A	4.50	90.0	203.96	18,356.40	2157.04

MONTHLY TOTAL GALLONS 2157

* % Virgin A.C. Required by the Approved Job Mix Formula.

** Formula for gallons A.C. = pounds of A.C. Placed Divided by 8.51 lb/gallon (see specification section no. 109.03(e)2).

NOTE: The gallons of asphalt from surface treatment, tack coat, and mulch adhesive is from actual gallons @ 60 degrees Fahrenheit used within the specifications as recorded in field books.

Round Total Gallons to Zero (0) Decimal Places

Form MC-26-3 REV. 2-27-08

MOBILE COUNTY PUBLIC WORKS DEPARTMENT

MONTH PLACED Apr-11

PROJECT NO. MCP-303-10
COUNTY Mobile

BASE INDEX $2.060
MONTHLY INDEX $2.100

BITUMINOUS MATERIAL PRICE ADJUSTMENT WORKSHEET

ITEM NUMBER	DESCRIPTION	Gallons Emulsified or Cutback Asphalt used During Month
401-A	PRIME	1218.75

MONTHLY TOTAL GALLONS 1219

NOTE: The gallons of asphalt from surface treatment, tack coat, and mulch adhesive is from actual gallons @ 60 degrees Fahrenheit used within the specifications as recorded in field books.

Round Total Gallons to Zero (0) Decimal Places

Select a Year: 2010

PrintView

ALDOT ASPHALT INDEX SUMMARY 2010

Month	Unit of Measurement	PG Asphalt	PG Asphalt with Polymer	Emulsified Asphalt	Emulsified Asphalt with Polymer
January	$ per Gallon	1.89	2.53	1.92	2.23
	$ per Liter	0.499	0.668	0.508	0.589
February	$ per Gallon	2.02	2.66	1.99	2.30
	$ per Liter	0.533	0.704	0.526	0.609
March	$ per Gallon	2.05	2.70	1.99	2.31
	$ per Liter	0.542	0.714	0.527	0.611
April	$ per Gallon	2.10	2.74	2.02	2.35
	$ per Liter	0.554	0.725	0.534	0.621
Base May	$ per Gallon	2.12	2.78	2.06	2.38
	$ per Liter	0.561	0.733	0.543	0.630
June	$ per Gallon	2.12	2.78	2.06	2.38
	$ per Liter	0.561	0.733	0.543	0.630
July	$ per Gallon	2.08	2.72	2.03	2.35
	$ per Liter	0.549	0.718	0.536	0.620
August	$ per Gallon	2.00	2.62	1.99	2.31
	$ per Liter	0.529	0.693	0.526	0.610
September	$ per Gallon	1.97	2.61	1.99	2.31
	$ per Liter	0.520	0.689	0.526	0.610
October	$ per Gallon	1.93	2.58	1.95	2.26
	$ per Liter	0.511	0.681	0.514	0.596
November	$ per Gallon	1.92	2.56	1.93	2.26
	$ per Liter	0.508	0.676	0.511	0.596
December	$ per Gallon	1.93	2.56	1.93	2.26
	$ per Liter	0.509	0.677	0.510	0.596

Select a Year: 2010

PrintView

ALDOT ASPHALT INDEX SUMMARY 2011

Month	Unit of Measurement	PG Asphalt	PG Asphalt with Polymer	Emulsified Asphalt	Emulsified Asphalt with Polymer
January	$ per Gallon	1.95	2.58	1.96	2.28
	$ per Liter	0.515	0.682	0.517	0.602
February	$ per Gallon	2.01	2.64	2.00	2.33
	$ per Liter	0.531	0.698	0.529	0.614
March	$ per Gallon	2.07	2.71	2.01	2.33
	$ per Liter	0.546	0.715	0.531	0.616
Month April	$ per Gallon	2.19	2.83	2.10	2.41
	$ per Liter	0.580	0.747	0.555	0.638
May	$ per Gallon	2.37	3.03	2.17	2.47
	$ per Liter	0.625	0.800	0.573	0.652
June					
July					
August					
September					
October					
November					
December					

FORM MC-27-1 REV. 4-29-11

ALABAMA DEPARTMENT OF TRANSPORTATION

Adjustments Due To Cost Of Construction Fuel For HMA Production

Project No. **MCP-303-10**
County **Mobile**

Base Index for HMA Fuel Production (Ib1) = **$2.040**

Month and Year of Base Index = **May-10**

Definitions:

P = Total Partial Payment on Monthly Estimate.
P1 = Partial Payment for HMA Fuel Production
Ib1 = Base Index for HMA Fuel Production
Im1 = Monthly Index for HMA Fuel Production
G1 = # of Gallons used for HMA Fuel Production.
D1 = Algebraic Difference (Im1-Ib1).

Refer to Specification Section 109.03(e).

Month	Year	(1) G1	(2) Im1	(3) D1	(4) P1	(5) P
April	2011	408	2.75	0.71	289.68	289.68

(3)=(2)-(Ib1)
(4)=(1)*(3)
(5)=(4)

*NOTE

A "positive" D1 or D2 indicates payment to the Contractor.
A "negative" D1 or D2 indicates payment to the State.

5/4/2011

FORM MC-27-2 REV. 4-29-11

ALABAMA DEPARTMENT OF TRANSPORTATION

MONTH April - 2011

PROJECT NO. **MCP-303-10**
COUNTY **Mobile**

BASE INDEX **$2.040**
MONTHLY INDEX **$2.750**

HMA FUEL COST - PRICE ADJUSTMENT WORKSHEET

ITEM NO.	Rate: 2 gal/ton	Tonnage Placed During Month	Gal of Fuel Used During Month
429-A	2.0	203.96	407.92

MONTHLY TOTAL GALLONS 408

Round Total Gallons to Zero (0) Decimal Places

Select a Year: 2010

Print View

ALDOT FUEL INDEX SUMMARY 2010

Month	Unit of Measurement	Fuel Index	Fuel Index for HMA Production Only
January	$ per Gallon	2.12	1.96
	$ per Liter	0.560	0.519
February	$ per Gallon	1.92	1.78
	$ per Liter	0.508	0.470
March	$ per Gallon	2.03	1.82
	$ per Liter	0.536	0.480
April	$ per Gallon	2.22	1.94
	$ per Liter	0.587	0.513
Base May	$ per Gallon	2.35	2.04
	$ per Liter	0.621	0.539
June	$ per Gallon	1.93	1.73
	$ per Liter	0.511	0.457
July	$ per Gallon	1.92	1.68
	$ per Liter	0.506	0.444
August	$ per Gallon	2.13	1.88
	$ per Liter	0.563	0.497
September	$ per Gallon	1.97	1.80
	$ per Liter	0.520	0.475
October	$ per Gallon	2.17	1.97
	$ per Liter	0.574	0.521
November	$ per Gallon	2.13	1.95
	$ per Liter	0.564	0.516
December	$ per Gallon	2.31	2.05
	$ per Liter	0.610	0.542

Select a Year: 2011

Print View

ALDOT FUEL INDEX SUMMARY 2011

Month	Unit of Measurement	Fuel Index	Fuel Index for HMA Production Only
January	$ per Gallon	2.45	2.18
	$ per Liter	0.647	0.575
February	$ per Gallon	2.58	2.35
	$ per Liter	0.681	0.621
March	$ per Gallon	2.91	2.63
	$ per Liter	0.769	0.696
Month April	$ per Gallon	3.10	2.75
	$ per Liter	0.820	0.726
May	$ per Gallon	3.27	2.84
	$ per Liter	0.865	0.752
June			
July			
August			
September			
October			
November			
December			

MCP-303-10

Rock Road

4/11/11

429-A

1/2 WEARING
Surface

LOT 1

0.C	
24.920	+
26.040	+
26.000	+
26.070	+
25.090	+
25.170	+
25.320	+
25.350	+
203.960	+

4165087

WARNING: Hot Mix Asphalt Material may cause burns. Material may release toxic Hydrogen Sulfide (H2S) Gas. Prolonged or repeated skin contact may be harmful. See Hot Mix Asphalt MSDS for additional information.

H. O. WEAVER & SONS INC. PLANT 4 5087

Date: Apr-11-2011 Time: 08:37 Truck : ES1 86

Job: 13013

Mat'l: 429A
1/2" SURFACE
Cost Per TON: 58.50

Totals: 1 Loads 24.92 TON

Cust: 13013
MOBILE COUNTY
ROCK ROAD
P1522250

Gross	40.11 TON
Tare	15.19 TON
Net	24.92 TON

Comment:

9:00 AM
300'
5 AXLES

P.D. Terrconn

WEIGHMASTER:

Payment for the goods and services shown above is due no later than thirty (30) days following this date. By acceptance of these goods and services Purchaser agrees to pay interest at the rate of 18% per annum, (1½% per month), together with all costs of collection including a reasonable attorney's fee if payment is not paid to Hosea O. Weaver & Sons, Inc., when due.

Signed: T. Fuller

4165088

WARNING: Hot Mix Asphalt Material may cause burns. Material may release toxic Hydrogen Sulfide (H2S) Gas. Prolonged or repeated skin contact may be harmful. See Hot Mix Asphalt MSDS for additional information.

H. O. WEAVER & SONS INC. PLANT4 508B

Date: Apr-11-2011 Time: 08:39 Truck : ES1 71

Job: 13013

Mat'l: 429A
1/2" SURFACE
Cost Per TON: 58.50

Totals: 2 Loads 50.96 TON

Cust: 13013
MOBILE COUNTY
ROCK ROAD
P1522252

Gross	40.39 TON
Tare	14.35 TON
Net	26.04 TON

Comment: P.D Terrcon

9:50

4 AY 2900

WEIGHMASTER:

Payment for the goods and services shown above is due no later than thirty (30) days following this date. By acceptance of these goods and services Purchaser agrees to pay interest at the rate of 18% per annum, (1½% per month), together with all costs of collection including a reasonable attorney's fee if payment is not paid to Hosea O. Weaver & Sons, Inc., when due.

Signed: R.H

4165089

WARNING: Hot Mix Asphalt Material may cause burns. Material may release toxic Hydrogen Sulfide (H2S) Gas. Prolonged or repeated skin contact may be harmful. See Hot Mix Asphalt MSDS for additional information.

H. O. WEAVER & SONS INC. PLANT4 5089

7

Date: Apr-11-2011 Time: 08:42 Truck : ES1 21

Job: 13013

Mat'l: 429A
1/2" SURFACE
Cost Per TON: 58.50

Totals: 3 Loads 76.96 TON

Cust: 13013
MOBILE COUNTY
ROCK ROAD
9192252

Gross	40.47 TON
Tare	14.47 TON
Net	26.00 TON

Comment: P.D Terrcon

WEIGHMASTER:

Payment for the goods and services shown above is due no later than thirty (30) days following this date. By acceptance of these goods and services Purchaser agrees to pay interest at the rate of 18% per annum, (1½% per month), together with all costs of collection including a reasonable attorney's fee if payment is not paid to Hosea O. Weaver & Sons, Inc., when due.

Signed: Bob Jackson

4165091

WARNING: Hot Mix Asphalt Material may cause burns. Material may release toxic Hydrogen Sulfide (H2S) Gas. Prolonged or repeated skin contact may be harmful. See Hot Mix Asphalt MSDS for additional information.

H. O. WEAVER & SONS INC. PLANT4 (4) 5091

Date: Apr-11-2011 Time: 08:47 Truck : ES1 99

Job: 13013

Mat'l: 429A
1/2" SURFACE
Cost Per TON: 58.50

Totals: 5 Loads 128.12 TON

Cust: 13013
MOBILE COUNTY
ROCK ROAD
P1522252

Gross	40.63 TON
Tare	14.56 TON
Net	26.07 TON

Comment:

4 AT
10:05

P.O. Tarcom

295.00

WEIGHMASTER:

Payment for the goods and services shown above is due no later than thirty (30) days following this date. By acceptance of these goods and services Purchaser agrees to pay interest at the rate of 18% per annum, (1½% per month), together with all costs of collection including a reasonable attorney's fee if payment is not paid to Hosea O. Weaver & Sons, Inc., when due.

Signed:

4165090

WARNING: Hot Mix Asphalt Material may cause burns. Material may release toxic Hydrogen Sulfide (H2S) Gas. Prolonged or repeated skin contact may be harmful. See Hot Mix Asphalt MSDS for additional information.

H. O. WEAVER & SONS INC. PLANT4 5090

Date: Apr-11-2011 Time: 08:44 Truck : ES1 98

Job: 13013

Mat'l: 429A
1/2" SURFACE
Cost Per TON: 58.50

Totals: 4 Loads 102.05 TON

Cust: 13013
MOBILE COUNTY
ROCK ROAD
P1522252

Gross	40.22 TON
Tare	15.13 TON
Net	25.09 TON

Comment:

4 At
10:20
300°

R.D. Torrconn

WEIGHMASTER:

Payment for the goods and services shown above is due no later than thirty (30) days following this date. By acceptance of these goods and services Purchaser agrees to pay interest at the rate of 18% per annum, (1½% per month), together with all costs of collection including a reasonable attorney's fee if payment is not paid to Hosea O. Weaver & Sons, Inc., when due.

Signed: CASH

4165092

WARNING: Hot Mix Asphalt Material may cause burns. Material may release toxic Hydrogen Sulfide (H2S) Gas. Prolonged or repeated skin contact may be harmful. See Hot Mix Asphalt MSDS for additional information.

H. O. WEAVER & SONS INC. PLANT 4 5092

(6)

Date: Apr-11-2011 Time: 08:55 Truck : ES1 92

Job: 13013

Mat'l: 429A
1/2" SURFACE

Totals: 6 Loads 153.29 TON

Cost Per TON: 58.50

Cust: 13013
MOBILE COUNTY
ROCK ROAD
P1522252

Gross	39.60 TON
Tare	14.43 TON
Net	25.17 TON

Comment:

P.D Terracon

10:40

305°

WEIGHMASTER:

Payment for the goods and services shown above is due no later than thirty (30) days following this date. By acceptance of these goods and services Purchaser agrees to pay interest at the rate of 18% per annum, (1½% per month), together with all costs of collection including a reasonable attorney's fee if payment is not paid to Hosea O. Weaver & Sons, Inc., when due.

Signed: _____

4165093

WARNING: Hot Mix Asphalt Material may cause burns. Material may release toxic Hydrogen Sulfide (H_2S) Gas. Prolonged or repeated skin contact may be harmful. See Hot Mix Asphalt MSDS for additional information!

H. O. WEAVER & SONS INC. PLANT4 5093

7

Date: Apr-11-2011 Time: 09:02 Truck : ES1 13

Job: 13013

Mat'l: 429A
1/2" SURFACE
Cost Per TON: 58.50

Totals: 7 Loads 178.61 TON

Cust: 13013
MOBILE COUNTY
ROCK ROAD
P1522252

P.D Terracat

10:15
4A

Gross	40.05 TON
Tare	14.73 TON
Net	25.32 TON

Comment:

WEIGHMASTER:

Payment for the goods and services shown above is due no later than thirty (30) days following this date. By acceptance of these goods and services Purchaser agrees to pay interest at the rate of 18% per annum, (1½% per month), together with all costs of collection including a reasonable attorney's fee if payment is not paid to Hosea O. Weaver & Sons, Inc., when due.

Signed: James Cobb

4165094

WARNING: Hot Mix Asphalt Material may cause burns. Material may release toxic Hydrogen Sulfide (H2S) Gas. Prolonged or repeated skin contact may be harmful. See Hot Mix Asphalt MSDS for additional information.

H. O. WEAVER & SONS INC. PLANT4 5094

Date: Apr-11-2011 Time: 09:08 Truck : ES1 87

Job: 13013

Mat'l: 429A
1/2" SURFACE
Cost Per TON: 58.50

Totals: 8 Loads 203.96 TON

Cust: 13013
MOBILE COUNTY
ROCK ROAD
P1522253

PD
Fabracon
11:00
4AT

Comment:

Gross	40.10 TON
Tare	14.75 TON
Net	25.35 TON

WEIGHMASTER:

Payment for the goods and services shown above is due no later than thirty (30) days following this date. By acceptance of these goods and services Purchaser agrees to pay interest at the rate of 18% per annum, (1½% per month), together with all costs of collection including a reasonable attorney's fee if payment is not paid to Hosea O. Weaver & Sons, Inc., when due.

Signed: William Zipbach

MOBILE COUNTY ENGINEERING DEPARTMENT
QC/QA LOT COVER SHEET

PROJECT No. MCP-303-10 PROJECT NAME: Rock Road

ENGINEERING: Mobile County Engineering CONTRACTOR: Esfeller Construction

LOT NUMBER 2 DATE OF PLACEMENT: 4/12/11

ITEM	COMPLETED BY	COMPLETED AT	ENGINEERS OFFICE (✓)	ENGINEERS OFFICE ( )
COVER SHEET	ENGINEER	OFFICE	✓	
BMT-4	INSPECTOR	PROJECT	✓	
BMT-19	ENGINEER	OFFICE	✓	
BMT-20	CONTRACTOR	PLANT	✓	
BMT-20	TESTING LAB	PLANT	✓	
BMT-97	ENGINEER	OFFICE	N/A	
QC/QA-1	ENGINEER	OFFICE	✓	
QC/QA-3	ENGINEER	OFFICE	✓	
MC-LS-1 & 2	INSPECTOR	PROJECT	✓	
MC-CDW	TESTING LAB	PLANT	✓	
MC-26-1, 2, & 3	ENGINEER	OFFICE	✓	
MC-27-1, & 2	ENGINEER	OFFICE	✓	
ASPHALT TICKETS (copies only)	ENGINEER	OFFICE	✓	
ADDING MACHINE TAPE (copies only)	ENGINEER	OFFICE	✓	

Form BMT-4 Revised 4-29-11

MOBILE COUNTY PUBLIC WORKS
ENGINEERING DEPARTMENT

GDBP PROJECTS ONLY PLANT MIX DAILY PLACEMENT REPORT

Date 4/12/11

Project No. Mcp-303-10 Project Name Rock Road

Contractor Esfeller Construction Total Tons in Contract 410 tons

Producer H.O. Weaver

Weather Today Sunny Low 57 °F High 82 °F

Tack Coat

Placed Today: STA _____ STA _____

Length: _____ ft **Width:** _____ ft **Area:** _____ sq.yds.

Today: _____ gallons **Rate:** _____ gallons per sq.yds.

From Previous Report: _____ gallons _____ sq.yds.

To Date: _____ gallons _____ sq.yds.

Plant Mix

Asphalt Placed Today: 210.41 Tons 420,820.0 lbs.

Previous Report: 203.96 Tons **Delivery Temp:** 312 °F Highest 298 °F Lowest

To Date: 414.37 Tons 828,740.0 lbs.

Pay Item Number: 429-A **Mix No.** 1/2" **Lot No.** 2

Yield Each 1000 S.Y. (Approximate) This Date

Yeild	STA	STA	Length	Width	SQ.YD.	Tons	Pounds	Rate (lbs/sqyd)	Required Rate
1	39+00	48+00	900	10	1000.00	75.45	150,900	150.90	165
2	48+00	58+50	1050	10	1166.67	75.71	151,420	129.79	165
3	58+50	61+00	250	10	↓				
4	Gwadz Road								
5	Driveways				925.05	59.25	118,500	128.10	165
6									
7									
8									
9									
10									

Example Only

Remarks _____

Inspector Kenneth Ellison **Project Engineer** _____

Terracon

BMT-19

ALABAMA DEPARTMENT OF TRANSPORTATION
WORKSHEET SUMMARY OF LOT TEST RESULTS
AIR VOIDS and AC CONTENT

Project No. Rock Road MCP-303-10 — County Mobile

Pay Item No. 429-A — Mix No. 1/2"

% AC Content Required: 5.50 — % Air Voids: 4.00

Lot No. 2 — Date: 4/12/2011

AC Content					Air Voids			
Testing Increm.	Contractor	State	Ref. St/Contr	Dev.:	Contractor	State	Ref. St/Contr	Dev.:
1		5.43		0.07		3.78		0.22
2								
3								
4								
			Average:	0.07			Average:	0.22

Pay Factors: AC Content: 1.00 — Air Voids: 1.00

Lot No. _____ — Date: _____

AC Content					Air Voids			
Testing Increm.	Contractor	State	Ref. St/Contr	Dev.:	Contractor	State	Ref. St/Contr	Dev.:
1								
2								
3								
4								
			Average:				Average:	

Pay Factors: AC Content: — Air Voids:

Project Number : MCR 2006 316

Project Name : SMITH, ROCK, ETC

Form BMT-20

MOBILE COUNTY PUBLIC WORKS
ENGINEERING DEPARTMENT
ASPHALT PLANT MIXTURE TEST REPORT

CONTRACTOR TESTING X

DEPARTMENTAL TESTING

Pay Item No. 429A Mix No. 1/2" Lot No. 4 Date(s) Sampled 12-Apr-11

Producer Hosea O. Weaver & Sons, Inc. THEODORE Date(s) Tested 12-Apr-11

Tons Produced (This Report) 599.66 TONS

Prime Contractor: ESFELLER Paving Contractor: ESFELLER

ANALYSIS

Sample Number		1	2	3	4	5	6
Time Sampled							
Loading Temperature, C'							
Sieve	Job Mix Gradation (% Passing)						
37.5 mm (1 1/2 inch)							
25 mm (1 inch)							
19mm (3/4 inch)							
12.5 mm (1/2 inch)	100	100					
9.5 mm (3/8 inch)	97	96					
4.75 mm (no. 4)	67	66					
2.36 mm (no. 8)	45	42					
1.18 mm (no. 16)	34	32					
600 um (no. 30)	25	24					
300 um (no. 50)	12	12					
150 um (no. 100)	7	7					
75 um (no. 200)	5.4	5.2					
Percent Asphalt Req'd. (Total Sample)	5.50%	5.50%					
Percent Asphalt (Total Sample)		5.43%					
Dust / Asphalt Ratio		1.00%					
Rice Gravity		2.469					
AIR VOIDS		3.78%					
VMA (%)		16.7%					
CRUSHED PARTICLES		85%					
STABILITY		2133					
FLOW		10.2					
ROSS COUNT (%)		NA					

MIXING TEMPERATURE

TRUCK #	LOADING TEMP F'

REMARKS:

MCA-303-10

223.80 tons COUNTY MIX

REPORTED TO TERRICON

375.86 tons REPORTED TO THOMPSON

Copies : Division

Project Engineer

File

John C Hom

Certified Technician

BMT-20
REV. 4-1-01

ALABAMA
DEPARTMENT OF TRANSPORTATION
ASPHALT PLANT MIXTURE TEST REPORT

Contractor Testing
Departmental Testing xxxxxx

PROJECT No. MCP-303-10
Rock Road
County Mobile
Division 9th
Lab No.

Pay Item No. 429-A Mix No. 1/2" Lot No. 2 Date(s) Sampled 4/12/2011

Producer Mobile Asphalt Company Date(s) Tested 4/12/2011

Tons Produced (this report): 223.80 - 13.39 = 210.41

Prime Contractor: Esfeller Paveing Contractor: Esfeller

ANALYSIS

Sample Number		1	2	3	4	5	Remarks:
Time Sampled							
Loading Temp.							*Out of Spec.
Sieve	Job Mix Gradation (% Passing)						** 13.39 TONS WENT TO Esfeller Construction FOR Personal Drive ways. 210.41 PAYABLE
37.55mm (1 1/2")							
25.0mm (1")							
19.0mm (3/4")							
12.5mm (1/2")	100	100					
9.5mm (3/8")	97	96					
4.75mm (No. 4)	67	66					
2.36mm (No. 8)	45	42					
1.18mm (No. 16)	34	32					
600um (No. 30)	25	24					
300um (No. 50)	12	12					
150um (No. 100)	7	7					
75um (No. 200)	5.4	5.2					
Percent Asphalt Req'd. (Total Sample)		5.50					
Percent Asphalt (Total Sample)		5.43					
Dust/Asphalt Ratio		1.00					
Rice Gravity		2.469					
Air Voids (%)		3.78					
VMA (%)		16.7					
Crushed Particles		85					
Stability (kN) (lbs)		2133					
Flow (.3mm) (in.)		10.2					

Copies:

Leroy Bayley
Technician

Form QC/QA-1

Revised 04/11

Mobile County Engineering Department
Summary of Adjusted Tonnage

Project Number	County	Division
MCP-303-10	Mobile	9th

Contractor	Contract Bid Price (per ton)
Esfeller Construction	85.00$

Pay Item Number	Mix Number
429-A	1/2"

Lot Number	Tonnage Placed	Asphalt Content		Air Voids		Pay Factor Cores	* Referee Test Needed
		Number of Tests	Pay Factor	Number of Tests	Pay Factor		
1	203.96	1	1.0	1	1.0	1.0	
2	210.41	1	1.0	1	1.0	1.0	

The Department to enter Yes or No, If No, enter pay factors on QC/QA-3. If Yes, indicate which characteristics, I.e, AC(asphalt content), AV(air voids) or MD(mat density).
Example: Yes - AV. Where refree testing is required, use QC/QA-2

Sheet No. 1 of 1

Form QC/QA-3

Revised 04/11

Mobile County Engineering Department
Summary of Adjusted Tonnage

Project Number	County	Division
MCP-303-10	Mobile	9th

Contractor	Contract Bid Price (per ton)
Esfeller Construction	85.00$

Pay Item Number	Mix Number
429-A	1/2"

Lot Number	(1) Tonnage Placed	(2) Pay Factor Asphalt Content	(3) Pay Factor Air Voids	(4) Pay Factor Cores	(5) Tonnage At No Pay	(6) Adjusted Tonnage
1	203.96	1.0	1.0	1.0	Ø	203.96
2	210.41	1.0	1.0	1.0	Ø	210.41
					QC/QA 1000	0.00
					TOTAL TONS	414.37

(6) = (1) x ((2)* or (3)* or (4)*)
(5) = (1) - (6)

*Apply Only The Lowest Numerical Pay Factor

Sheet No. ____ of ____

MC-LS-1 REVISED 2-27-08

ITEM #: 429A

PROJECT NO. MCP-303-10

DATE: 4/12/2011

CONTRACTOR: EsFeller

DESCRIPTION: WEARING SURFACE 165 lbs/sqyd, 1/2" mix, range B

Load #	WIDTH	STA	STA	SQ. YD	SQ. YD DAY	1000 SQYD	TICKET #	TRUCK #	TONS	TONS DAY	TONS DATE	YIELD	YIELD DAY	1000 SY RATE
1	10.00	39 + 00	42 + 75	416.67	416.67		4165183	92	25.11	25.11	229.07	120.53		
2	10.00	42 + 75	45 + 50	305.56	722.23		184	87	25.09	50.20	254.16	164.22		
3	10.00	45 + 50	48 + 00	277.78	1,000.01	1,000.01	185	83	25.25	75.45	279.41	181.80		150.90
4	10.00	48 + 00	51 + 00	333.33	1,333.34		187	86	25.37	100.82	304.78	152.22		
5	10.00	51 + 00	55 + 00	444.44	1,777.78		188	71	25.20	126.02	329.98	113.40		
6	10.00	55 + 00	58 + 50	388.89	2,166.67	1,166.66	189	21	25.14	151.16	355.12	129.29		129.79
Loads 7,8 and 9 combined on Main Line, Inter-section and Driveways.														
	10.00	58 + 50	61 + 00	277.78	2,444.45									
	Gwodz Road			408.60	2,853.05									
	Driveway @ 60+88 LT			31.40	2,884.45									
7	Driveway @ 60+87 RT			70.37	2,954.82		191	92	24.72	175.88	379.84			
8	Driveway @ 52+95 RT			67.65	3,022.47		192	87	24.53	200.41	404.37			
9	Driveway @ 47+30 LT			69.25	3,091.72	925.05	193	83	10.00	210.41	414.37	128.10	136.11	128.10

Wearing Surface Layer, 1/2" Max.
Aggregate Size Mix, ESAL Range C
429A

Drawing	Shape	Calculations		Total Per Page	
60+88 LT	A	[((24 FT + 12 FT) / 2) x 8 FT] / 9 = 16.00	SQ.YD.		
	B	[((12 FT + 9.75 FT) / 2) x 12.75 FT] / 9 = 15.40	SQ.YD.	31.40	SQ.YD.
		Shapes (A thru B) was paved on 4/12/2011			
60+87 RT	A	[((34.5 FT + 22.5 FT) / 2) x 9.25 FT] / 9 = 29.29	SQ.YD.		
	B	[((22.5 FT + 21 FT) / 2) x 17 FT] / 9 = 41.08	SQ.YD.	70.37	SQ.YD.
		Shapes (A thru B) was paved on 4/12/2011			
52+95 RT	A	[((40 FT + 30.5 FT) / 2) x 5.5 FT] / 9 = 21.54	SQ.YD.		
	B	[((30.5 FT + 26.75 FT) / 2) x 14.5 FT] / 9 = 46.11	SQ.YD.	67.65	SQ.YD.
		Shapes (A thru B) was paved on 4/12/2011			
47+30 LT	A	[((38 FT + 29 FT) / 2) x 4.5 FT] / 9 = 16.75	SQ.YD.		
	B	[((29 FT + 23.5 FT) / 2) x 18 FT] / 9 = 52.50	SQ.YD.	69.25	SQ.YD.
		Gwodz Road			
1	A	[((84.53 FT + 75.47 FT) / 2) x 20 FT] / 9 = 177.77	SQ.YD.	177.77	SQ.YD.
2	A	(2.37 FT x 10.63 FT x 0.5) / 9 = 1.39	SQ.YD.		
	B	[((2.37 FT + 5.89 FT) / 2) x 5.49 FT] / 9 = 2.51	SQ.YD.		
	C	(5.89 FT x 2.67 FT x 0.5) / 9 = 0.87	SQ.YD.		
	D	(3.53 FT x 2.67 FT x 0.5) / 9 = 0.52	SQ.YD.		
	E	(1.46 FT x 9.65 FT x 0.5) / 9 = 0.78	SQ.YD.	6.07	SQ.YD.
3	A	(13.77 FT x 4.13 FT x 0.5) / 9 = 3.15	SQ.YD.		
	B	[((4.13 FT + 8.49 FT) / 2) x 5 FT] / 9 = 3.50	SQ.YD.		
	C	[((8.49 FT + 17.25 FT) / 2) x 5 FT] / 9 = 7.15	SQ.YD.		
	D	((17.25 FT + 22.08 FT) / 2) x 1.06 FT] / 9 = 2.31	SQ.YD.		
	E	[((3.94 FT x 22.08 FT] / 9 = 9.66	SQ.YD.		
	F	(3.59 FT x 14.53 FT x 0.5) / 9 = 2.89	SQ.YD.		
	G	[((22.08 FT + 11.04 FT) / 2) x 5 FT] / 9 = 9.20	SQ.YD.		
	H	(11.04 FT x 5 FT x 0.5) / 9 = 3.06	SQ.YD.	224.76	SQ.YD.
			Total	647.27	SQ.YD.

Driveways

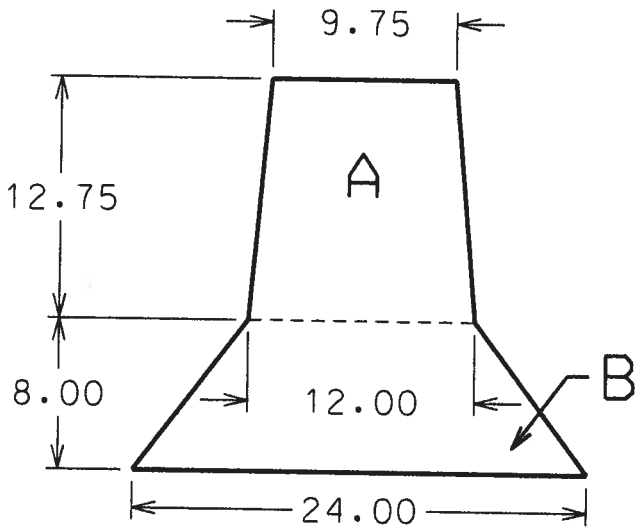

60+88 LT

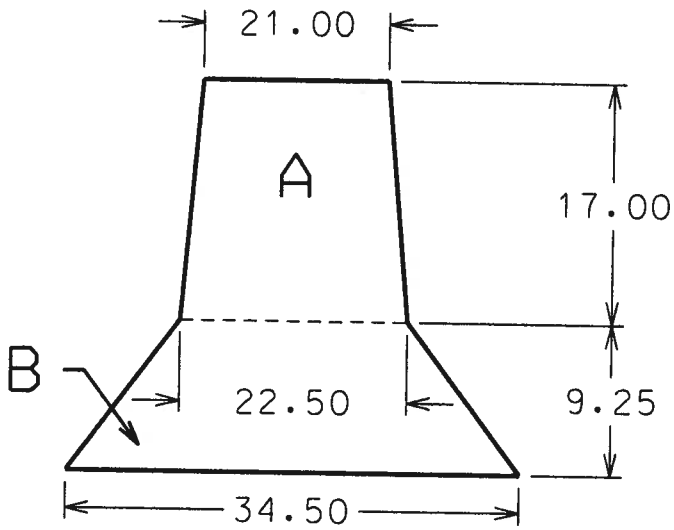

60+87 RT

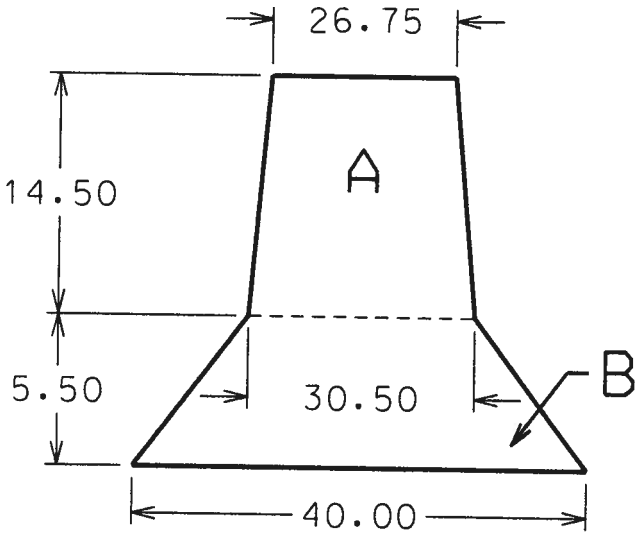

52+95 RT

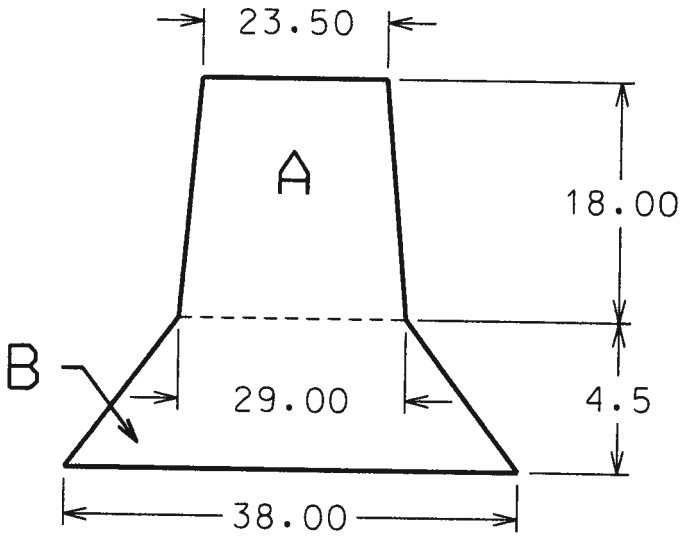

47+30 LT

Gwodz Road

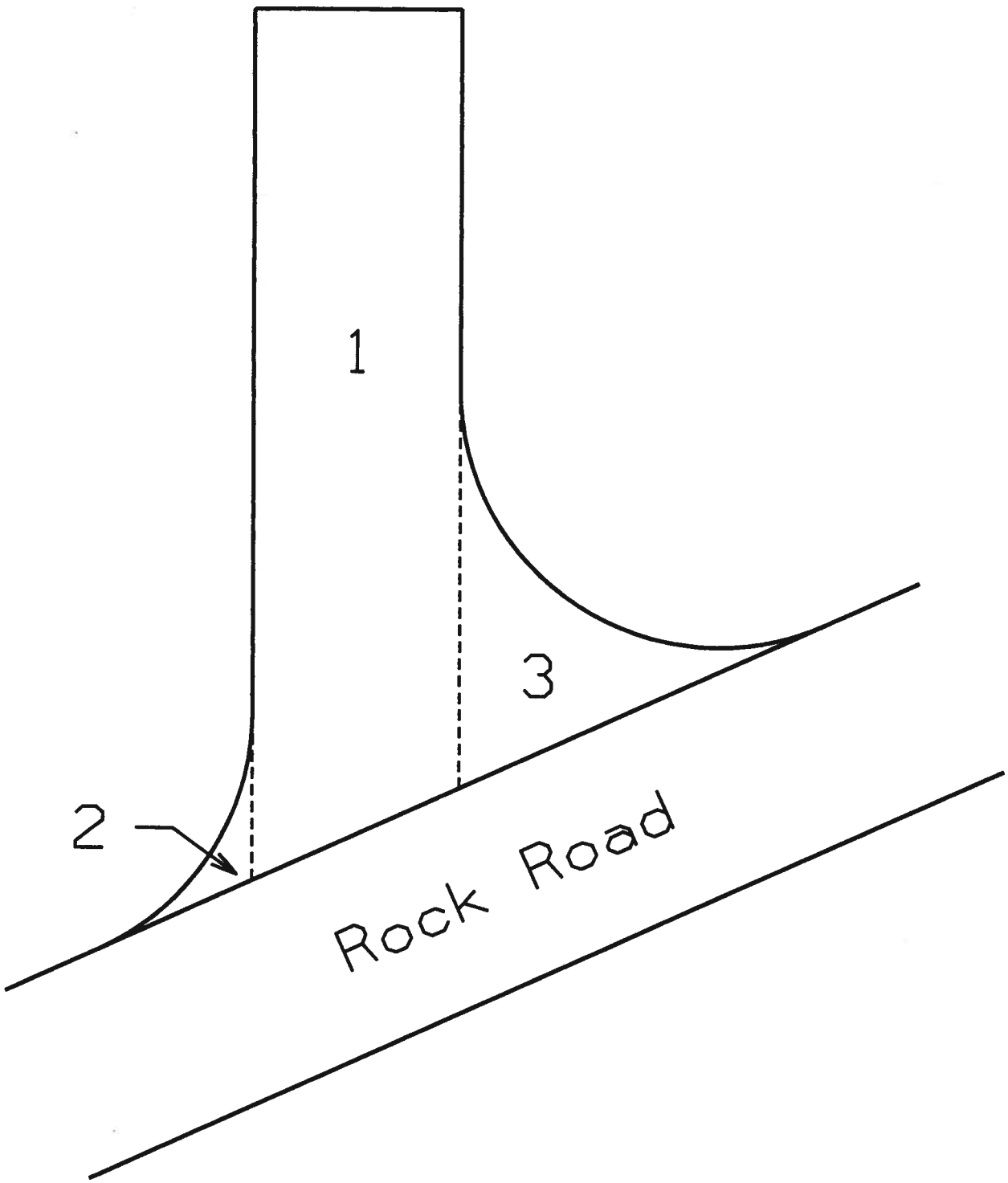

Drawing 1

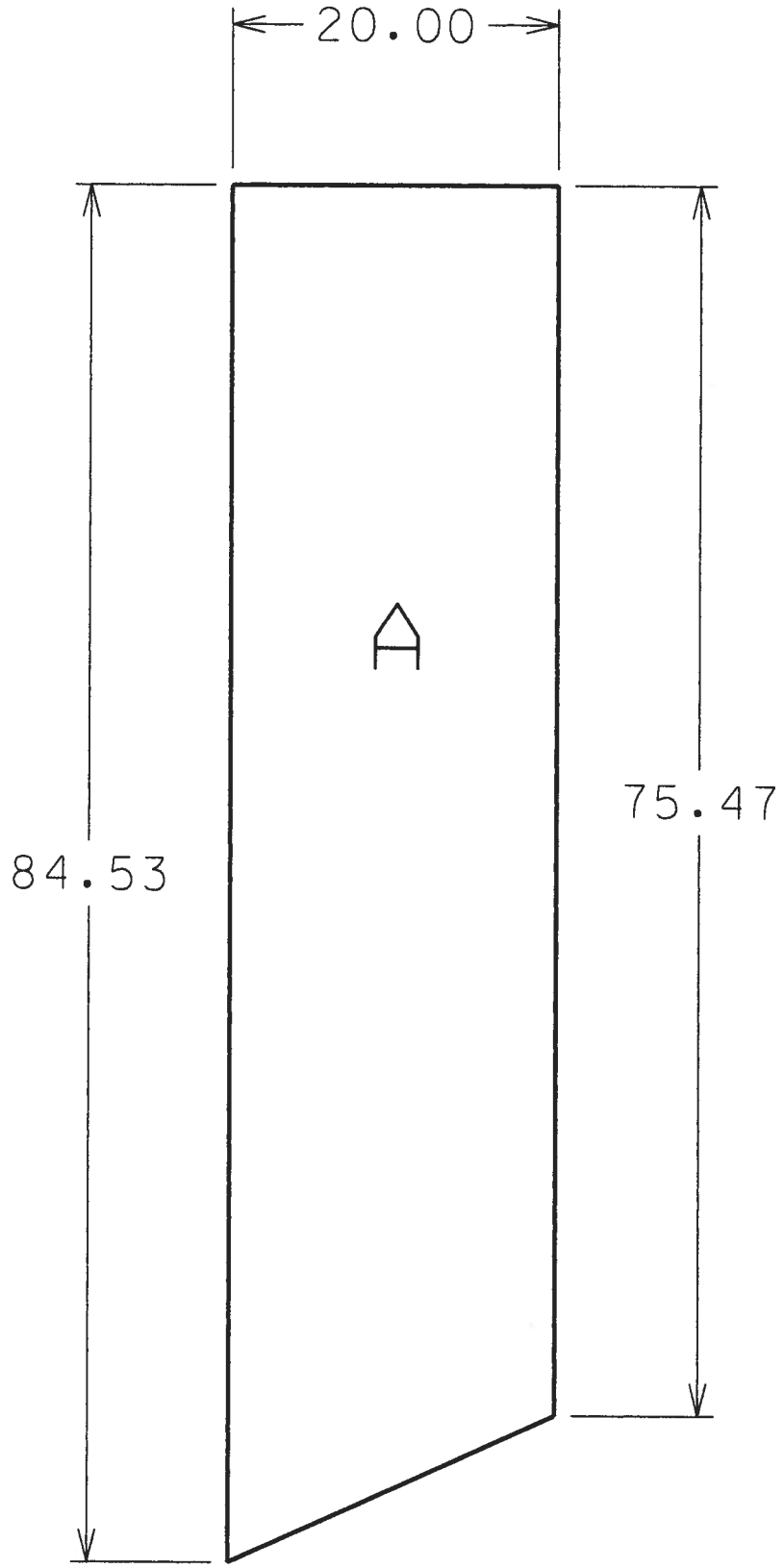

Drawing 2

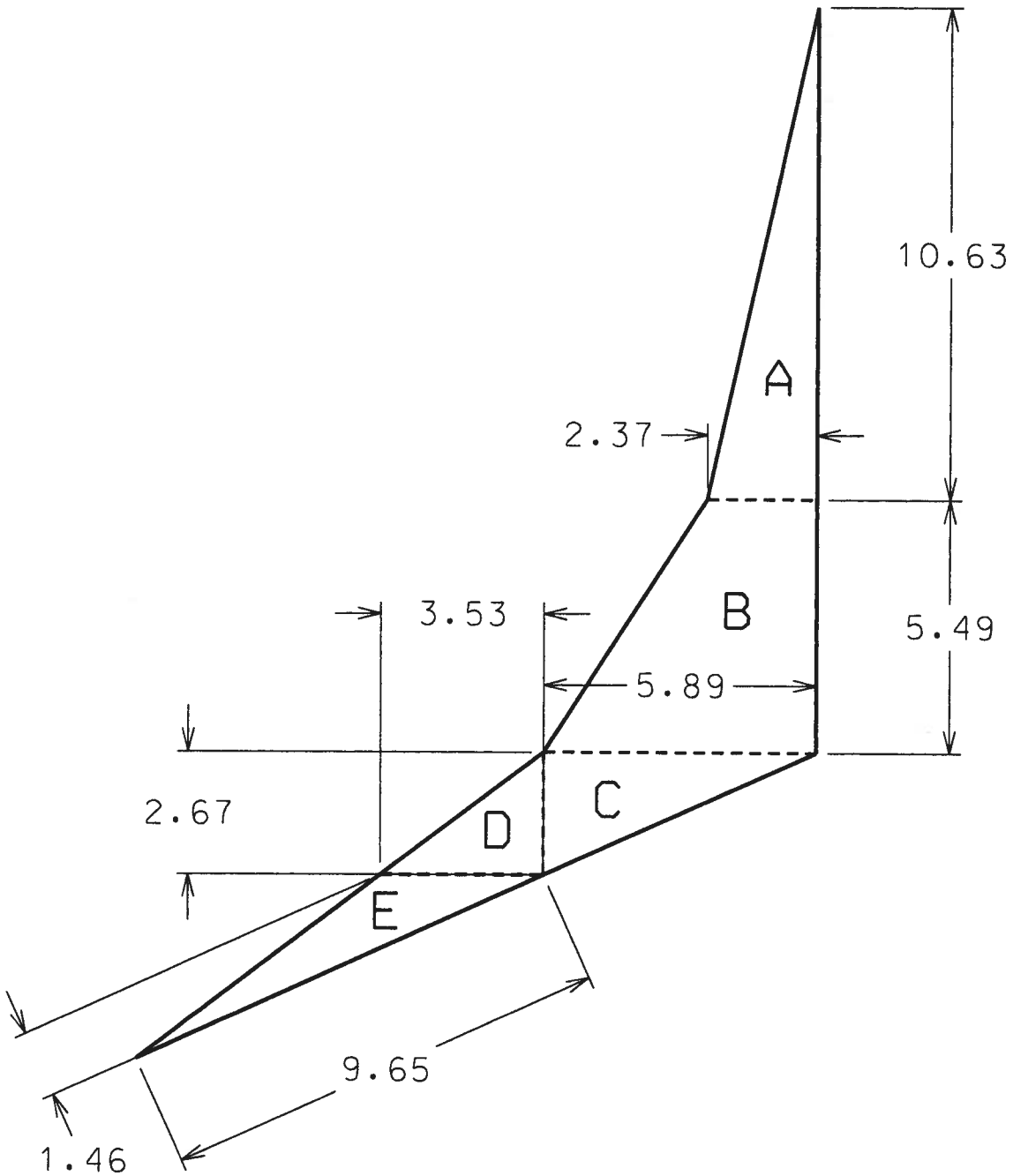

Drawing 3

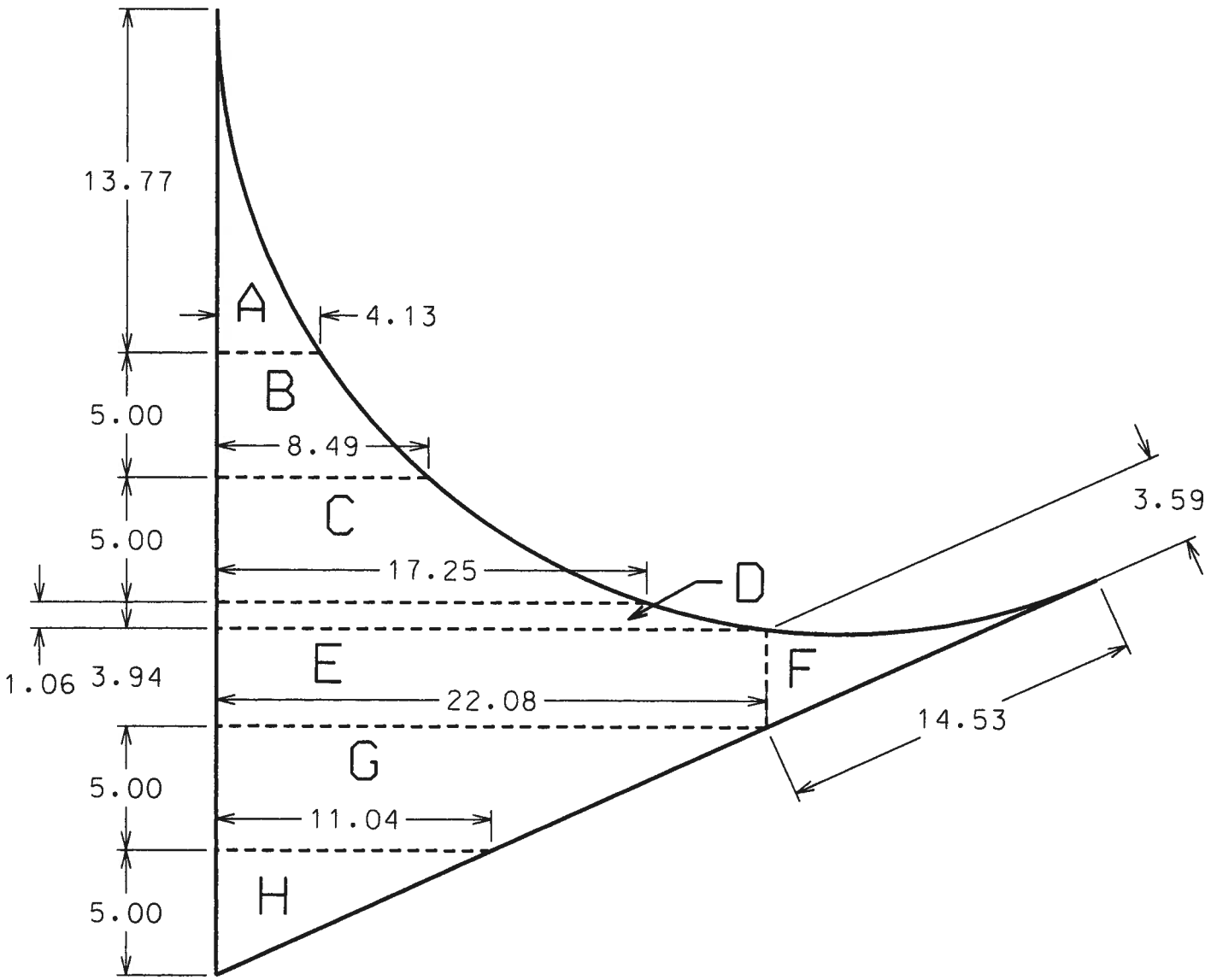
13.77
A
4.13
B
5.00
8.49
C
5.00
17.25
D
3.59
1.06
3.94
E
F
22.08
14.53
G
5.00
11.04
H
5.00

Terracon

Form MC-CDW

Mobile County Public Works
CORE DENSITY WORKSHEET

Project No. MCP-303-10
Lot No. 1 and 2
Road Name: Rock Road
Producer H. O. Weaver
Prime Contractor: Esfeller
Date(s) Tested 4/13/2011
Paveing Contractor: Esfeller

Type Mix: 429-A Wearing Surface 1/2" Mix

FORMULA

Bulk Specific Gravity = A / (B-C)

Where:
A = Wt. of speciman in air
B = Wt. of surface dry specimen in air
C = Wt. of specimen in water

% Density = Bulk Specific Gravity / Rice Gravity x 100

Core #	Station	Lane	Thick.	A	B	C	Bulk Sp. Gravity	Rice Gravity	% Density
C-1	59+75 L	6.9 EOP	1-3/4"	652.9	654.6	370.8	2.300	2.475	92.9
C-3	54+50 R	6.2 EOP	1"	414.9	415.8	233.6	2.277	2.475	92.0

Leroy Bailey
Technician

Project Engineer

Example Only

FORM MC-26-1 REV. 2-27-08

MOBILE COUNTY PUBLIC WORKS DEPARTMENT

Bituminous Material Price Adjustments

Project No. **MCP-303-10**
County: **Mobile**

Base Index for Asphalt Cement (Ib1) = **$2.120**
Base Index for Emulsified and Cutback Asphalt (Ib2) = **$2.060**
Month and Year of Base Index = **May-10**

Definitions:

P = Total Partial Payment on Monthly Estimate.
P1 = Partial Payment for Asphalt Cement.
P2 = Partial Payment for Emulsified and Cutback Asphalts.
Ib1 = Base Index for Asphalt Cement.
Ib2 = Base Index for Emulsified and Cutback Asphalts.
Im1 = Monthly Index for Asphalt Cement.
Im2 = Monthly Index for Emulsified and Cutback Asphalts.
G1 = Gallons of Asphalt Cement used during the month.
G2 = Gallons of Emulsified and Cutback Asphalt used during the month.
D1 = Algebraic Difference (Im1-Ib1).
D2 = Algebraic Difference (Im2-Ib2).

Refer to Specification Section 109.03(e).

Month	Year	(1) G1	(2) G2	(3) Im1	(4) Im2	(5)* D1	(6)* D2	(7) P1	(8) P2	(9) P
APRIL	2011	4382	1219	2.19	2.10	0.07	0.04	306.74	48.76	355.50

(7)=(1)*(5)
(8)=(2)*(6)
(9)=(7)+(8)

*NOTE

A "positive" D1 or D2 indicates payment to the Contractor.
A "negative" D1 or D2 indicates payment to the State.

5/2/2011

Form MC-26-2 REV. 2-27-08

MOBILE COUNTY PUBLIC WORKS DEPARTMENT

MONTH PLACED Apr-11

PROJECT NO. MCP-303-10
COUNTY Mobile

BASE INDEX $2.120
MONTHLY INDEX $2.190

BITUMINOUS MATERIAL PRICE ADJUSTMENT WORKSHEET

	ITEM NO.	% Virgin A.C. *	% Virgin A.C. x 2000 = lb/ton	Tonnage Placed During Month	lb of A.C. Placed During Month	Gallons A.C. For Month **
LOT 1	429-A	4.50	90.0	203.96	18,356.40	2157.04
LOT 2	429-A	4.50	90.0	210.41	18,936.90	2225.25
					TOTAL	4382.29

MONTHLY TOTAL GALLONS 4382

* % Virgin A.C. Required by the Approved Job Mix Formula.

** Formula for gallons A.C. = pounds of A.C. Placed Divided by 8.51 lb/gallon (see specification section no. 109.03(e)2).

NOTE: The gallons of asphalt from surface treatment, tack coat, and mulch adhesive is from actual gallons @ 60 degrees Fahrenheit used within the specifications as recorded in field books.

Round Total Gallons to Zero (0) Decimal Places

Form MC-26-3 REV. 2-27-08

MOBILE COUNTY PUBLIC WORKS DEPARTMENT

MONTH PLACED **Apr-11**

PROJECT NO. **MCP-303-10**
COUNTY **Mobile**

BASE INDEX **$2.060**
MONTHLY INDEX **$2.100**

BITUMINOUS MATERIAL PRICE ADJUSTMENT WORKSHEET

	ITEM NUMBER	DESCRIPTION	Gallons Emulsified or Cutback Asphalt used During Month
LOT 1	401-A	PRIME	1218.75

MONTHLY TOTAL GALLONS 1219

NOTE: The gallons of asphalt from surface treatment, tack coat, and mulch adhesive is from actual gallons @ 60 degrees Fahrenheit used within the specifications as recorded in field books.

Round Total Gallons to Zero (0) Decimal Places

Select a Year: 2011

PrintView

ALDOT ASPHALT INDEX SUMMARY 2011

Month	Unit of Measurement	PG Asphalt	PG Asphalt with Polymer	Emulsified Asphalt	Emulsified Asphalt with Polymer
January	$ per Gallon	1.95	2.58	1.96	2.28
	$ per Liter	0.515	0.682	0.517	0.602
February	$ per Gallon	2.01	2.64	2.00	2.33
	$ per Liter	0.531	0.698	0.529	0.614
March	$ per Gallon	2.07	2.71	2.01	2.33
	$ per Liter	0.546	0.715	0.531	0.616
April	$ per Gallon	2.19	2.83	2.10	2.41
	$ per Liter	0.580	0.747	0.555	0.638
May	$ per Gallon	2.37	3.03	2.17	2.47
	$ per Liter	0.625	0.800	0.573	0.652
June					
July					
August					
September					
October					
November					
December					

FORM MC-27-1 REV. 4-29-11

ALABAMA DEPARTMENT OF TRANSPORTATION

Adjustments Due To Cost Of Construction Fuel For HMA Production

Project No. **MCP-303-10**
County **Mobile**

Base Index for HMA Fuel Production (Ib1) = **$2.040**

Month and Year of Base Index = **May-10**

Definitions:

P = Total Partial Payment on Monthly Estimate.
P1 = Partial Payment for HMA Fuel Production
Ib1 = Base Index for HMA Fuel Production
Im1 = Monthly Index for HMA Fuel Production
G1 = # of Gallons used for HMA Fuel Production.
D1 = Algebraic Difference (Im1-Ib1).

Refer to Specification Section 109.03(e).

Month	Year	(1) G1	(2) Im1	(3) D1	(4) P1	(5) P
APRIL	2011	829	2.75	0.71	588.59	588.59

(3)=(2)-(Ib1)
(4)=(1)*(3)
(5)=(4)

*NOTE
A "positive" D1 or D2 indicates payment to the Contractor.
A "negative" D1 or D2 indicates payment to the State.

5/4/2011

FORM MC-27-2 REV. 4-29-11

ALABAMA DEPARTMENT OF TRANSPORTATION

MONTH _____

PROJECT NO. **MCP-303-10** BASE INDEX **$2.040**

COUNTY **Mobile** MONTHLY INDEX **$2.750**

HMA FUEL COST - PRICE ADJUSTMENT WORKSHEET

	ITEM NO.	Rate: 2 gal/ton	Tonnage Placed During Month	Gal of Fuel Used During Month
LOT 1	429-A	2.0	203.96	407.92
LOT 2	429-A	2.0	210.41	420.82
			TOTAL	828.74

MONTHLY TOTAL GALLONS 829

Round Total Gallons to Zero (0) Decimal Places

Select a Year: 2011

Print View

ALDOT FUEL INDEX SUMMARY 2011

Month	Unit of Measurement	Fuel Index	Fuel Index for HMA Production Only
January	$ per Gallon	2.45	2.18
	$ per Liter	0.647	0.575
February	$ per Gallon	2.58	2.35
	$ per Liter	0.681	0.621
March	$ per Gallon	2.91	2.63
	$ per Liter	0.769	0.696
April	$ per Gallon	3.10	2.75
	$ per Liter	0.820	0.726
May	$ per Gallon	3.27	2.84
	$ per Liter	0.865	0.752
June			
July			
August			
September			
October			
November			
December			

MCP-303-10
4/12/11
Rock Road

1/2 WEARING
SURFACE

O·C	
25·110	+
25·090	+
25·250	+
25·370	+
25·200	+
25·140	+
24·720	+
24·530	+
10·000	+
210·410	+

4165183

WARNING: Hot Mix Asphalt Material may cause burns. Material may release toxic Hydrogen Sulfide (H2S) Gas. Prolonged or repeated skin contact may be harmful. See Hot Mix Asphalt MSDS for additional information.

H. O. WEAVER & SONS INC. PLANT4 5183

Leroy B TONNACON

Date: Apr-12-2011 Time: 12:39 Truck : ES1 12

Job: 13013

Mat'l: 429A
1/2" SURFACE
Cost Per TON: 58.50

Totals: 1 Loads 25.11 TON

Cust: 13013
MOBILE COUNTY
ROCK ROAD
P1522256

Gross	39.53 TON
Tare	14.42 TON
Net	25.11 TON

Comment:

D. Rodg 300° 4-Axle
1:20 pm

WEIGHMASTER:
Payment for the goods and services shown above is due no later than thirty (30) days following this date. By acceptance of these goods and services Purchaser agrees to pay interest at the rate of 18% per annum, (1½% per month), together with all costs of collection including a reasonable attorney's fee if payment is not paid to Hosea O. Weaver & Sons, Inc., when due.

Signed: James Cook

4165184

WARNING: Hot Mix Asphalt Material may cause burns. Material may release toxic Hydrogen Sulfide (H2S) Gas. Prolonged or repeated skin contact may be harmful. See Hot Mix Asphalt MSDS for additional information.

H. O. WEAVER & SONS INC. PLANT 4 S184

Leroy B
TONNACON

Date: Apr-12-2011 Time: 12:56 Truck : ES1 87

Job: 13013

Mat'l: 429A
1/2" SURFACE
Cost Per TON: 58.50

Totals: 2 Loads 50.20 TON

Cust: 13013
MOBILE COUNTY
ROCK ROAD
P1522252

Gross		39.78 TON
Tare	(R)	14.69 TON
Net		25.09 TON

Comment:

W Brady 321° 4-AXLE
1:33 pm

WEIGHMASTER:

Payment for the goods and services shown above is due no later than thirty (30) days following this date. By acceptance of these goods and services Purchaser agrees to pay interest at the rate of 18% per annum, (1½% per month), together with all costs of collection including a reasonable attorney's fee if payment is not paid to Hosea O. Weaver & Sons, Inc., when due.

Signed: Bob Jackson

4165185

WARNING: Hot Mix Asphalt Material may cause burns. Material may release toxic Hydrogen Sulfide (H2S) Gas. Prolonged or repeated skin contact may be harmful. See Hot Mix Asphalt MSDS for additional information.

H. O. WEAVER & SONS INC. PLANT4 5185

LB TENNACON

Date: Apr-12-2011 Time: 13:06 Truck : EST (83)

Job: 13013

Mat'l: 429A
1/2" SURFACE

Totals: 3 Loads 75.45 TON Cost Per TON: 58.50

Cust: 13013
MOBILE COUNTY
ROCK ROAD
P1522252

Gross	40.01 TON
Tare	14.76 TON
Net	25.25 TON

Comment:

4-AXLE
301° 1:41 PM

WEIGHMASTER:

Payment for the goods and services shown above is due no later than thirty (30) days following this date. By acceptance of these goods and services Purchaser agrees to pay interest at the rate of 18% per annum, (1½% per month), together with all costs of collection including a reasonable attorney's fee if payment is not paid to Hosea O. Weaver & Sons, Inc., when due.

Signed:

4165187

WARNING: Hot Mix Asphalt Material may cause burns. Material may release toxic Hydrogen Sulfide (H2S) Gas. Prolonged or repeated skin contact may be harmful. See Hot Mix Asphalt MSDS for additional information.

H. O. WEAVER & SONS INC. PLANT 4 5187

LB TENNACON

Date: Apr-12-2011 Time: 13:23 Truck : ES1 86

Job: 13013

Mat'l: 429A
1/2" SURFACE
Cost Per TON: 58.50

Totals: 4 Loads 100.82 TON

Cust: 13013
MOBILE COUNTY
ROCK ROAD
P1522252

Gross	40.52 TON
Tare	15.15 TON
Net	25.37 TON

Comment:

D. Brady 298°
4-AXLE 1:59 PM

WEIGHMASTER:

Payment for the goods and services shown above is due no later than thirty (30) days following this date. By acceptance of these goods and services Purchaser agrees to pay interest at the rate of 18% per annum, (1½% per month); together with all costs of collection including a reasonable attorney's fee if payment is not paid to Hosea O. Weaver & Sons, Inc., when due.

Signed: William Jetsch

4165188

WARNING: Hot Mix Asphalt Material may cause burns. Material may release toxic Hydrogen Sulfide (H2S) Gas. Prolonged or repeated skin contact may be harmful. See Hot Mix Asphalt MSDS for additional information.

H. O. WEAVER & SONS INC. PLANT4 5188

Date: Apr-12-2011 Time: 13:28 Truck : ES1 71 LB TONNACON

Job: 13013

Mat'l: 429A
1/2" SURFACE
Cost Per TON: 58.50

Totals: 5 Loads 126.02 TON

Cust: 13013
MOBILE COUNTY
ROCK ROAD
P1522252

Gross	39.57 TON
Tare	14.37 TON
Net	25.20 TON

Comment:

D. Brady 312°
4-axle 2:10 pm

WEIGHMASTER:
Payment for the goods and services shown above is due no later than thirty (30) days following this date. By acceptance of these goods and services Purchaser agrees to pay interest at the rate of 18% per annum, (1½% per month), together with all costs of collection including a reasonable attorney's fee if payment is not paid to Hosea O. Weaver & Sons, Inc., when due.

Signed: RH

4165189

WARNING: Hot Mix Asphalt Material may cause burns. Material may release toxic Hydrogen Sulfide (H2S) Gas. Prolonged or repeated skin contact may be harmful. See Hot Mix Asphalt MSDS for additional information.

H. O. WEAVER & SONS INC. PLANT 4 5189

Date: Apr-12-2011 Time: 13:41 Truck : ES1 21 LB TONNACON

Job: 13013

Mat'l: 429A
1/2" SURFACE
Cost Per TON: 58.50

Totals: 5 Loads 151.16 TON

Cust: 13013
MOBILE COUNTY
ROCK ROAD
P1522222

Gross	39.64 TON
Tare	14.50 TON
Net	25.14 TON

Comment:

D. Brady 4-AXLE
298° 2:26 pm

WEIGHMASTER:

Payment for the goods and services shown above is due no later than thirty (30) days following this date. By acceptance of these goods and services Purchaser agrees to pay interest at the rate of 18% per annum, (1½% per month), together with all costs of collection including a reasonable attorney's fee if payment is not paid to Hosea O. Weaver & Sons, Inc., when due.

Signed: James Cook

4165191

WARNING: Hot Mix Asphalt Material may cause burns. Material may release toxic Hydrogen Sulfide (H2S) Gas. Prolonged or repeated skin contact may be harmful. See Hot Mix Asphalt MSDS for additional Information.

H. O. WEAVER & SONS INC. PLANT 4 5191

LB TENNACON

Date: Apr-12-2011 Time: 14:37

Job: 13013

Truck : ES1 (92)

Mat'l: 429A
1/2" SURFACE

Cost Per TON: 58.50

Totals: 7 Loads 175.88 TON

Cust: 13013
MOBILE COUNTY
ROCK ROAD
P1522252

Gross	38.95 TON
Tare	14.23 TON
Net	24.72 TON

Comment:

D. Brady 291°
4-AxLe 3:14 pm

WEIGHMASTER:

Payment for the goods and services shown above is due no later than thirty (30) days following this date. By acceptance of these goods and services Purchaser agrees to pay interest at the rate of 18% per annum, (1½% per month), together with all costs of collection including a reasonable attorney's fee if payment is not paid to Hosea O. Weaver & Sons, Inc., when due.

Signed:

4165192

WARNING: Hot Mix Asphalt Material may cause burns. Material may release toxic Hydrogen Sulfide (H2S) Gas. Prolonged or repeated skin contact may be harmful. See Hot Mix Asphalt MSDS for additional information.

H. O. WEAVER & SONS INC. PLANT 4 5192

LB TENNA Cont

Date: Apr-12-2011 Time: 14:41 Truck : ES1

87

8

Job: 13013

Mat'l: 429A
1/2" SURFACE

Totals: 8 Loads 200.41 TON Cost Per TON: 58.50

Cust: 13013
MOBILE COUNTY
ROCK ROAD
P1522252

Gross	39.06 TON
Tare	14.53 TON
Net	24.53 TON

Comment:

4AF 4:05 300°

WEIGHMASTER:

Payment for the goods and services shown above is due no later than thirty (30) days following this date. By acceptance of these goods and services Purchaser agrees to pay interest at the rate of 18% per annum, (1½% per month), together with all costs of collection including a reasonable attorney's fee if payment is not paid to Hosea O. Weaver & Sons, Inc., when due.

Signed: Willi

4165193

WARNING: Hot Mix Asphalt Material may cause burns. Material may release toxic Hydrogen Sulfide (H2S) Gas. Prolonged or repeated skin contact may be harmful. See Hot Mix Asphalt MSDS for additional information.

H. O. WEAVER & SONS INC. PLANT 4 5193

LB

Date: Apr-12-2011 Time: 14:45 Truck : ESI TONNACON

Job: 13013

83

Mat'l: 429A
1/2" SURFACE
Cost Per TON: 58.50

Totals: 9 Loads ~~223.80~~ TON
210.41 TON

Cust: 13013
MOBILE COUNTY
ROCK ROAD
PI522252

Gross	37.97 TON
Tare	14.58 TON
Net	23.39 TON

Comment:

6:45

4AF 305°

USED 10.00 TON
on other Project 13.39 TON
23.39

FICHMASTER:

Payment for the goods and services shown above is due no later than thirty (30) days following this date. By acceptance of these goods and services Purchaser agrees to pay interest at the rate of 18% per annum, (1½% per month), together with all costs of collection including a reasonable attorney's fee if payment is not paid to Hosea O. Weaver & Sons, Inc., when due.

Signed: William Zielach

BITUMINIOUS PRICE ADJUSTMENTS PACKAGE

MC-BCR	**Bituminous Certification Request (final)**
MC-3-1	**Liquid Asphalt Checks (final submittal)**
MC-3-2	**Liquid Tack Checks (final submittal)**
MC-26-1	**Bituminous Materials Price Adjustment**
MC-26-2	**Asphalt Worksheet**
MC-26-3	**Tack Worksheet**
MC-27-1	**HMA Fuel Production Cost Adjustments**
MC-27-2	**HMA Worksheet**

Hosea O. Weaver and Sons, Inc.

PROJECT:
COUNTY:

DEAR SIR:

The Job Mix below may be only used at the plant noted and for materials listed. The plant mix will be produced in complience with the applicable specifications, plan notes, and special provisions.

PLANT: THEODORE, AL.
SECTION: 429 A 1/2" " THRU THE ZONE " SURFACE - PATCHING -LEVELING
ESAL: A-B

MATERIALS	% (APPROX)	DESCRIPTION		SOURCE		BPN #
	18	# 89 GRANITE	1620	MARTIN-MARIETTA	NOVA SCOTIA	N/A
	27	SCREENINGS	0315	MARTIN-MARIETTA	MAYLENE ,AL	23
	20	SAND	1753	TRIANGLE MATL'S	JACKSON,AL.	N/A
	14	PEA GRAVEL	1753	TRIANGLE MATL'S	JACKSON,AL.	N/A
	20	RAP		SR# 188 FRANKLIN CREEK THRU GRAND BAY		N/A
	1	BAGHOUSE FINES		PLANT		N/A

ASPHALT GULF COAST ASPHALT MOBILE AL.

ASPHALT BINDER GRADE P.G. 67-22

JOB MIX SIEVES		OTHER INFORMATION:		50 BLOW
1 1/2		% BINDER		5.50%
1		A/C Lbs/Ton		110
3/4		Gmm		2.479
1/2	100	Lbs/Ft3		147.8
3/8	97	T.S.R.		.96
# 4	67	ANTI STRIP	ADHERE 1500	0.50%
# 8	45	STABILITY		2200
# 16	34	EFF. A/C		5.39%
# 30	25	D/A		1.00
# 50	12	COARSE ANGULARITY		67
# 100	7	FINE ANGULARITY		43
# 200	5.4	Gsb		2.689

VMA: 16.6%

NOTE: 4.50 % P.G. 67-22 must be added to the mix. The remaining 1.00 % comes from the rap.

MIXING TEMP. 335'
COMP.TEMP 290'

Wilson Beard

Designer Level III Exp Date 12-31-2012

P. O. Box 8039 • Mobile, Alabama 36689-0039
(251) 342-3025 • Fax (251) 342-0108

FORM MC-3-1 REV. 2-27-08

MOBILE COUNTY PUBLIC WORKS DEPARTMENT

LIQUID ASPHALT CHECKS

PROJECT NO. MCP-303-10
CONTRACTOR: Esfeller Construction
COUNTY: MOBILE

MATERIAL GRADE: P.G. 67-22
USED FOR: ASPHALT PLACEMENT

PRODUCER NO.	(LBS) MATERIAL DELIVERED

DATE	(TONS) ASPHALT PLACED	(LBS) ASPHALT REQ.	ASPHALT LAYER
4/11/11	203.96	18,356.40	wearing
4/12/11	210.41	18,936.90	wearing

PRODUCER NO.	(LBS) MATERIAL DELIVERED

DATE	(TONS) ASPHALT PLACED	(LBS) ASPHALT REQ.	ASPHALT LAYER

TOTAL

TOTAL 37,293.30 LBS

MUST SUBMIT FORM MC-BCR

FORM MC-3-2 REV. 2-27-08

MOBILE COUNTY PUBLIC WORKS DEPARTMENT

LIQUID TACK CHECKS

PROJECT NO. MCP-303-10
CONTRACTOR: Esfeller Construction
COUNTY: MOBILE

MATERIAL GRADE: AE-P
USED FOR: ~~TACK COAT~~ Prime

PRODUCER NO.	(LBS) MATERIAL DELIVERED

DATE	(GALLONS @ 60 °F) TACKT PLACED	(LBS) TACK REQ.
4/6/11	1218.75	10,371.56

PRODUCER NO.	(LBS) MATERIAL DELIVERED

DATE	(GALLONS @ 60 °F) TACKT PLACED	(LBS) TACK REQ.

TOTAL	

TOTAL	10,371.56 LBS

MUST SUBMIT FORM MC-BCR

FORM MC-BCR REVISED 2-28-08

BITUMINOUS CERTIFICATION REQUEST

PROJECT NUMBER: MCP-303-10 **STARTING DATE** April 6, 2011
DESCRIPTION: Rock Road **ENDING DATE** April 12, 2011

Supplier H.O. Weaver

MATERIAL GRADE	Asphalt - P.G. 67-22	**QUANTITY**	37,293	POUNDS
MATERIAL GRADE	Prime - AE-P	**QUANTITY**	10,372	POUNDS

I John Smith (print name) DO HEREBY CERTIFY THAT ALL THE BITUMINOUS MATERIAL USED ON THE ABOVE MENTIONED PROJECT MEETS OR EXCEEDS ALL OF THE ALABAMA DEPARTMENT OF TRANSPORTATION SPECIFICATIONS FOR THE TYPE, GRADE AND QUANTITY OF BITUMINOUS MATERIAL LISTED ABOVE.

I hereby certify the above statements to be correct and true

John Smith
Authorized Official

STATE OF ALABAMA, County of Mobile
Sworn and subscribed to before me this
20. day of May 20 11

Notary Public

FORM MC-2 REV. 2-27-08

MOBILE COUNTY PUBLIC WORKS DEPARTMENT

SLOPE SHEETS FOR ASPHALT

PROJECT NO. MCP-303-10
CONTRACTOR: Esfeller Construction
COUNTY: MOBILE

ASPHALT LAYER: Wearing - 429-A
DATE 4/11/2011 & 4/12/2011

STATIONS	LEFT SIDE REQUIRED	LEFT SIDE PLACED	RIGHT SIDE REQUIRED	RIGHT SIDE PLACED	REMARKS
39 + 00	2.20	2.1	2.20	2.1	
39 + 50	2.20	2.3	2.20	2.1	
40 + 00	2.20	2.2	2.20	2.1	
40 + 50	2.20	2.2	2.20	2.1	
41 + 00	2.20	2.1	2.20	2.1	
41 + 50	2.20	2.1	2.20	2.0	
42 + 00	2.20	2.1	2.20	2.1	
42 + 50	2.20	2.1	2.20	2.1	
43 + 00	2.20	2.2	2.20	2.2	
43 + 50	2.20	2.1	2.20	2.1	
44 + 00	2.20	2.2	2.20	2.1	
44 + 50	2.20	2.2	2.20	2.0	
45 + 00	2.20	2.2	2.20	2.0	
45 + 50	2.20	2.2	2.20	2.0	
46 + 00	2.20	2.2	2.20	2.0	
46 + 50	2.20	2.3	2.20	2.0	
47 + 00	2.20	2.2	2.20	2.1	
47 + 50	2.20	2.2	2.20	2.1	
48 + 00	2.20	2.1	2.20	2.0	
48 + 50	2.20	2.2	2.20	2.0	
49 + 00	2.20	2.3	2.20	2.0	
49 + 50	2.20	2.2	2.20	2.1	
50 + 00	2.20	2.2	2.20	2.1	
50 + 50	2.20	2.2	2.20	2.0	
51 + 00	2.20	2.1	2.20	2.1	
51 + 50	2.20	2.1	2.20	2.0	
52 + 00	2.20	2.1	2.20	2.0	
52 + 50	2.20	2.1	2.20	2.0	
53 + 00	2.20	2.1	2.20	2.0	

STATIONS	LEFT SIDE REQUIRED	LEFT SIDE PLACED	RIGHT SIDE REQUIRED	RIGHT SIDE PLACED	REMARKS
53 + 50	2.20	2.1	2.20	2.1	
54 + 00	2.20	2.1	2.20	2.0	
54 + 50	2.20	2.1	2.20	2.0	
55 + 00	2.20	2.1	2.20	2.0	
55 + 50	2.20	2.1	2.20	2.0	
56 + 00	2.20	2.2	2.20	2.0	
56 + 50	2.20	2.1	2.20	2.0	
57 + 00	2.20	2.2	2.20	2.0	
57 + 50	2.20	1.9	2.20	2.0	
58 + 00	2.20	2.0	2.20	2.0	
58 + 50	2.20	2.0	2.20	2.1	
59 + 00	2.20	2.1	2.20	2.0	
59 + 50	2.20	2.2	2.20	2.0	
60 + 00	2.20	2.3	2.20	2.1	

MOBILE COUNTY ENGINEERING DEPARTMENT

MC-83 Daily Concrete Placement Reports

EXAMPLE
CONCRETE PACKET

2. MASTER PROPORTION TABLE.

MASTER PROPORTION TABLE One Cubic Yard {Meter} Proportions							
Concrete Class - Type	A-1a	A-2a	B-3	A-1c	C-4	E-6a	S-7a
Cement Factor (lbs.) {kg}	620 {368}	620 {368)	508 {302}	620 {368}	620 {368}	658 {390}	696 {413}
Fly Ash, GGBFS, & Microsilica (lbs.) {kg}	See Note e	See Note e	See Note e	See Note e	See Note e	See Note e	See Note e
Maximum Water in Gallons {liters}	36 {178}	39 {193}	36 {178}	33 {163}	33 {163}	35 {173}	39 {193}
Fine Aggregate (lbs.) {kg}	1088 {645}	1204 {714}	1487 {882}	1097 {651}	1504 {892}	947 {562}	1096 {650}
Coarse Aggregate (lbs.) {kg}	1839 {1091}	1829 {1085}	1712 {1016}	1857 {1102}	1677 {995}	1974 {1171}	1696 {1006}
Total Air % by Volume	2.5 to 6.0	2.5 to 6.0	2.5 to 6.0	2.5 to 6.0	2.5 to 6.0	2.5 to 6.0	2.5 to 6.0
Maximum Consistency Slump (in.) {mm}	3 {75}	3 {75}	3 {75}	3.5 {90}	3 {75}	3.5 {90}	7 {180}
Coarse Aggregate Size No.	57 or 67	57 or 67	57 or 67	57 or 67	57 or 67	57 or 67	57 or 67
Minimum 28 Day Compressive Strength (psi) (MPa)	3000 {21}	3000 {21}	2000 {14}	4000 {28}	3000 {21}	4500 {31}	3000 {21}
Special Requirement Notes	b	b	b	a, b	b	a, b	c, d

Notes:

a. The Class A Type 1c mix and Class E mixes will require an approved Type "A", Water-reducing admixture or a Type "D" Water-reducing and retarding admixture in the mix design in order to obtain the 3.5 inch {90 mm} slump. These admixtures shall be included in the mix design.

b. Approved Type "F", Mid-Range Water-Reducing (MRWR) admixtures may be used to chemically increase the slump of the concrete if they are shown in the approved mix design. The chemical slump shall not exceed 5.5 inches {140 mm}. In no case shall the water to total cementitious material (cement plus mineral admixtures) ratio shown in the Master Proportion Table be exceeded in order to increase the slump. Concrete shall be tested for slump before and after the addition of the chemical admixture. Mid-Range water reducers are chemical admixtures that will provide a water reduction of 8 to 18 percent without extending the setting time of the concrete mix. Approved Mid-Range water reducers are listed in the *"Materials, Sources, and Devices with Special Acceptance Requirements"* manual, List II-1 *"Chemical Admixtures for Portland Cement Concrete"*.

c. Seal concrete used as an integral part of a bridge support system will require the use of washed gravel coarse aggregate, Type II cement, and Class "F" fly ash, or Ground Granulated Blast Furnace Slag (GGBFS) to aid in reducing the heat of hydration. Fly ash or GGBFS use in mixes shall be as specified in Items 501.02(c)5. and 501.02(c)6. respectively. Seal concrete not used as an integral part of the bridge support system does not require the use of washed gravel coarse aggregate, Type II cement and Class "F" fly ash or GGBFS.

d. Approved Type "F", Water-reducing, high range admixtures or Type "G", Water-reducing and retarding, high range admixtures may be used to obtain a flowable concrete mix within the allowable slump range, provided they are shown in the approved mix design. In no case shall the water to total cementitious material ratio shown in the Master Proportion Table be exceeded in order to increase the slump.

e. Fly ash use in concrete mixes shall be as specified in Item 501.02(c)5. Ground granulated blast furnace slag use in concrete mixes shall be as specified in Item 501.02(c)6. Microsilica use in concrete mixes shall be as specified in item 501.01(c)7.

Explanation of Table:

The following construction code numbers identify the kind of work on which a designated mix is to be used:

Type 1 - Mix "a", bridge substructure concrete, box culverts, retaining walls, and concrete safety barriers. Mix "c", bridge superstructure concrete.

Type 2 - Mix "a", headwalls, inlets, and miscellaneous concrete units.

Type 3 - Slope paving.

Type 4 - Machine laid curbs, gutters, or combination curbs and gutters.

Type 6 - Bridge concrete for use when the structure is exposed to salt water, where shown by the plan details, or directed by the Engineer.

Type 7 - Underwater concrete.

Substitution of Type 1 mixes for Type 2 and 3 mixes or the substitution of a higher strength mix for one of a lower strength may be permitted if such is requested in writing.

The mixes shown by the Table were designed on a specific gravity of 2.65 for sand and 2.60 for coarse aggregate (bulk, saturated, surface dry). The design weights {masses} will be adjusted on the mix design to reflect the specific gravities of the actual aggregates being used. These mixes were designed to use either No. 57 or No. 67 coarse aggregate. If requested, the use of No. 7 may be permitted in Type 4 mixes and the use of No. 357 or No. 467 may be permitted in Type 7 mixes.

The basic design fineness modulus for sand is 2.60. The required gradation uniformity is given in Subarticle 802.02(g).

3. CHEMICAL ADMIXTURES FOR CONCRETE.

The Materials and Tests Engineer may approve the use of other chemical admixtures if requested in writing, except that calcium chloride will not be permitted.

The methods and equipment used for measuring and adding chemical admixtures shall be approved by the Materials and Tests Engineer. Equipment which will not accurately dispense the correct amount of chemical admixtures in an acceptable manner will not be approved.

4. AIR-ENTRAINING ADMIXTURES FOR CONCRETE.

An approved air-entraining admixture shall be used as specified in the Master Proportion Table. A range of total air content of 2.5 % to 6.0 % shall be maintained at the point of delivery. The mix design shall be based on a target total air content of 4.5 %.

The methods and equipment used for measuring and adding air-entraining admixtures shall be approved by the Materials and Tests Engineer. Equipment that does not accurately dispense the correct amount of air-entraining admixture in an acceptable manner will not be approved.

The total air content of the freshly mixed concrete shall be measured in accordance with the requirements given in AASHTO T 152 using a Type B pressure meter. All pressure meters used for measuring the total air content shall be calibrated prior to the beginning of concrete placement. The calibration of pressure meters shall be verified at least twice a week and anytime a questionable result is obtained.

5. SLUMP.

The consistency slump shown in the Master Proportion Table for each mix is considered the specified slump. When the specified slump is 3.0 inches {75 mm} or less, a tolerance of plus 0.5 inches {13 mm} will be acceptable for the mixture delivered at the work site; when the specified slump is greater than 3.0 inches {75 mm}, a tolerance of plus 1.0 inch {25 mm} will be acceptable. Any mix delivered with a slump less than the specified slump will be acceptable provided the mix is workable.

Slump shall be measured in accordance with the requirements given in AASHTO T 119.

6. FLY ASH USE.

Fly ash may be used in any mix design except where it is specified otherwise by the plans or proposal. On some projects, fly ash will be required for certain applications. In these cases, the requirements will be shown in a special provision or as a note on the plans.

If fly ash is used, the Master Proportion Table will be used as a guide in proportioning the mix components. Fly ash may be substituted for cement up to a maximum substitution rate of twenty percent for Class "F" fly ash and thirty percent for Class "C" fly ash by weight {mass}. The minimum substitution ratio of fly ash to the cement it replaced will be one to one.

When fly ash is substituted for cement in any mix design, the letter "F" will be added in the Class designation (i.e. Class A-1a becomes Class AF-1a, Class A-1c becomes Class AF-1c). Due to the difference in the specific gravity of fly ash and cement, adjustments will be made to the aggregate

Type of Construction	Material	Test	Frequency of Acceptance Samples and Tests for Job Control	Construction Stages for Obtaining Sample or Test	Sample Size	Procedures		Remarks
						Sampling Method	Test Methods	
		Test Cylinders	One set for every 50 yd^3 (40 m^3) or fraction thereof for each days pour. A Set of cylinders is composed of: 1-7 days and 2-28 days cylinders. NOTE: Additional cylinders shall be made to determine form stripping and opening to traffic; or in the case of seal concrete to determine dewatering before 7 days.	During placing of concrete operation.	AASHTO T-141	AASHTO T-141	AASHTO T22 and AASHTO T-23	Submit cylinders to Project or Division Laboratory for Standard Curing and compressive strength testing. Submit with Form BMT-1.
		Slump	First truck that arrives at the job site (See ALDOT-328) and every time concrete cylinders are made.	During concrete placing operation	ALDOT-328 AASHTO T-141	ALDOT 328 AASHTO T-141	AASHTO T-119	Report on Forms BMT-83, BMT-122, AND BC-101 (Inspector's Daily Report)

Type of Construction	Material	Test	Frequency of Acceptance Samples and Tests for Job Control	Construction Stages for Obtaining Sample or Test	Sample Size	Procedures		Remarks
						Sampling Method	Test Methods	
		Air Content	First truck that arrives at the job site (See ALDOT-328) and every time concrete cylinders are made.	During concrete placing operation	ALDOT-328 AASHTO T-141	ALDOT-328 AASHTO T-141	AASHTO T-152	Report on Forms BMT-83, BMT-122, and BC-101 (Inspector's Daily Report)
		Temperature of Concrete	First truck that arrives at the job site (See ALDOT-328) and every time concrete cylinders are made.	During concrete placing operation	ALDOT-328 AASHTO T-141	ALDOT-328 AASHTO T-141	ASTM C-1064	Report on Forms BMT-83, BMT-122, and BC-101 (Inspector's Daily Report)
		Cylinders for Pneumatically Applied Concrete	See ALDOT-231	During concrete placing operation		ALDOT-231	ALDOT-231	
		Concrete Monthly Reports	Monthly	During concrete placing operation				Report monthly to the Bureau of Materials and Tests (Concrete Section) on Form BMT-117
	Ready Mix Concrete		Ready Mix Concrete must meet all provisions of this section					
	Curing Materials, Liquid Membranes.		Approved prior to use	See List II-30.		AASHTO M-148		Must be from approved sources. See List II-30 in the Materials, Sources, and Devices with Special Acceptance Requirements Manual.

BMT-75
REV. 09/10/10

ALABAMA DEPARTMENT OF TRANSPORTATION
CONCRETE MIX DESIGN

PRODUCER: Bay Concrete
REMARKS:

DATE ISSUED: 05/29/2009
EXPIRES: 05/29/2013

IDENTIFICATION OF MATERIALS

MATERIAL	TYPE / PRODUCER / LOCATION / S.G. / V.C.
CEMENT	I / CEMEX / DEMOPOLIS, AL / 3.15 / M120
MINERAL ADMIXTURE #1	FLY ASH F / MINERAL RESOURCE / PETERSBURG, IN / 2.40 / P329
MINERAL ADMIXTURE #2	NONE
FINE AGGREGATE	#100 SAND / GLENN BRADFORD GRAVEL / DICKINSON, AL / 2.63 / 1741
COARSE AGGREGATE	#57 GRAVEL / GLENN BRADFORD GRAVEL / DICKINSON, AL / 2.60 / 1741
WATER	FROM APPROVED SOURCE
AIR ENTRAINING	EUCON AIR 30 / EUCLID / CLEVELAND, OH / C27
WATER REDUCER RETARDER	EUCON LR / EUCLID / CLEVELAND, OH / C14
WATER REDUCER	EUCON X-15 / EUCLID / CLEVELAND, OH / C15

CONCRETE MIX DESIGN
ONE CUBIC YARD (METER)

CLASS – TYPE	AF-1a
CEMENT FACTOR (lb.) (kg)	496 (294)
MINERAL ADMIXTURE #1 (lb.) (kg)	124 (74)
MINERAL ADMIXTURE #2 (lb.) (kg)	NONE
MAXIMUM WATER (Gallons) (Liters)	34.0 (168.4)
FINE AGGREGATE (lb.) (kg)	1,066 (632)
COARSE AGGREGATE (lb.) (kg)	1,850 (1,096)
TOTAL AIR (%)	2.5% - 6.0%
ALLOWABLE SLUMP (in) (mm)	3 (76)
AIR ENTRAINING (oz) (mL)	1.5 (58)
WATER REDUCER RETARDER (oz) (mL)	31.0 (1,201)
WATER REDUCER (oz) (mL)	43.4 (1,682)
MIX No.	FRM-058-09
APPROVED BY: SHANNON GOLDEN, P.E. CONCRETE ENGINEER	

NOTES:
THE CHEMICAL SLUMP MAY BE INCREASED TO 5.5 INCHES WITH THE USE OF TYPE F CHEMICAL ADMIXTURES
ADMIXTURES SHALL BE ADJUSTED AT THE FIELD FOR DESIRED RESULTS WITHOUT EXCEEDING THE MANUFACTURER'S MAX RECOMMENDED DOSAGE.
IF FM EXCEEDS 2.80 THEN 23.5 lb (14 kg) OF CEMENT SHALL BE ADDED AT NO ADDITIONAL COST TO THE STATE.

PROJECT INFORMATION AND DIVISION APPROVAL

CONTRACTOR USE ONLY		DIVISION USE ONLY	
PROJECT No.:	COUNTY:	PLANT LOCATION:	CERTIFICATE TYPE
STRUCTURE		VENDOR CODE:	☐ NRMCA ☐ PCI ☐ NPCA
		APPROVED BY:	
		DATE:	☐ CURRENT ☐ EXPIRED

BMT-75
REV. 09/10/10

ALABAMA DEPARTMENT OF TRANSPORTATION
CONCRETE MIX DESIGN

PRODUCER: Bay Concrete
REMARKS:

DATE ISSUED: 05/29/2009
EXPIRES: 05/29/2013

IDENTIFICATION OF MATERIALS

MATERIAL	TYPE / PRODUCER / LOCATION / S.G. / V.C.
CEMENT	I / CEMEX / DEMOPOLIS, AL / 3.15 / M120
MINERAL ADMIXTURE #1	FLY ASH F / MINERAL RESOURCE / PETERSBURG, IN / 2.40 / P329
MINERAL ADMIXTURE #2	NONE
FINE AGGREGATE	#100 SAND / GLENN BRADFORD GRAVEL / DICKINSON, AL / 2.63 / 1741
COARSE AGGREGATE	#57 GRAVEL / GLENN BRADFORD GRAVEL / DICKINSON, AL / 2.60 / 1741
WATER	FROM APPROVED SOURCE
AIR ENTRAINING	EUCON AIR 30 / EUCLID / CLEVELAND, OH / C27
WATER REDUCER RETARDER	EUCON LR / EUCLID / CLEVELAND, OH / C14
WATER REDUCER	EUCON X-15 / EUCLID / CLEVELAND, OH / C15

CONCRETE MIX DESIGN
ONE CUBIC YARD (METER)

CLASS – TYPE	AF-2a
CEMENT FACTOR (lb.) (kg)	498 (294)
MINERAL ADMIXTURE #1 (lb.) (kg)	124 (74)
MINERAL ADMIXTURE #2 (lb.) (kg)	NONE
MAXIMUM WATER (Gallons) (Liters)	34.0 (188.4)
FINE AGGREGATE (lb.) (kg)	1,066 (632)
COARSE AGGREGATE (lb.) (kg)	1,850 (1,098)
TOTAL AIR (%)	2.5% - 6.0%
ALLOWABLE SLUMP (in) (mm)	3 (76)
AIR ENTRAINING (oz) (mL)	1.5 (58)
WATER REDUCER RETARDER (oz) (mL)	31.0 (1,201)
WATER REDUCER (oz) (mL)	43.4 (1,682)
MIX No.	FRM-069-09
APPROVED BY: SHANNON GOLDEN, P.E. CONCRETE ENGINEER	

NOTES:
THE CHEMICAL SLUMP MAY BE INCREASED TO 5.5 INCHES WITH THE USE OF TYPE F CHEMICAL ADMIXTURES
ADMIXTURES SHALL BE ADJUSTED AT THE FIELD FOR DESIRED RESULTS WITHOUT EXCEEDING THE MANUFACTURER'S MAX RECOMMENDED DOSAGE.

PROJECT INFORMATION AND DIVISION APPROVAL

CONTRACTOR USE ONLY		DIVISION USE ONLY	
PROJECT No.:	COUNTY:	PLANT LOCATION:	CERTIFICATE TYPE
STRUCTURE			
		VENDOR CODE:	☐ NRMCA ☐ PCI ☐ NPCA
		APPROVED BY:	
		DATE:	☐ CURRENT ☐ EXPIRED

BMT-75
REV. 09/10/10

ALABAMA DEPARTMENT OF TRANSPORTATION
CONCRETE MIX DESIGN

PRODUCER: Bay Concrete
REMARKS:

DATE ISSUED: 05/29/2009
EXPIRES: 05/29/2013

IDENTIFICATION OF MATERIALS

MATERIAL	TYPE / PRODUCER / LOCATION / S.G. / V.C.
CEMENT	I / CEMEX / DEMOPOLIS, AL / 3.15 / M120
MINERAL ADMIXTURE #1	FLY ASH F / MINERAL RESOURCE / PETERSBURG, IN / 2.40 / P329
MINERAL ADMIXTURE #2	NONE
FINE AGGREGATE	#100 SAND / GLENN BRADFORD GRAVEL / DICKINSON, AL / 2.63 / 1741
COARSE AGGREGATE	#57 GRAVEL / GLENN BRADFORD GRAVEL / DICKINSON, AL / 2.60 / 1741
WATER	FROM APPROVED SOURCE
AIR ENTRAINING	EUCON AIR 30 / EUCLID / CLEVELAND, OH / C27
WATER REDUCER RETARDER	EUCON LR / EUCLID / CLEVELAND, OH / C14
WATER REDUCER	EUCON X-15 / EUCLID / CLEVELAND, OH / C15

CONCRETE MIX DESIGN
ONE CUBIC YARD (METER)

CLASS – TYPE	BF-3
CEMENT FACTOR (lb.) (kg)	406 (241)
MINERAL ADMIXTURE #1 (lb.) (kg)	102 (61)
MINERAL ADMIXTURE #2 (lb.) (kg)	NONE
MAXIMUM WATER (Gallons) (Liters)	32.0 (158.4)
FINE AGGREGATE (lb.) (kg)	1,209 (717)
COARSE AGGREGATE (lb.) (kg)	1,850 (1,098)
TOTAL AIR (%)	2.5% - 6.0%
ALLOWABLE SLUMP (in) (mm)	3 (76)
AIR ENTRAINING (oz) (mL)	1.5 (58)
WATER REDUCER RETARDER (oz) (mL)	25.4 (984)
WATER REDUCER (oz) (mL)	35.5 (1,376)
MIX No.	FRM-080-09
APPROVED BY: SHANNON GOLDEN, P.E. CONCRETE ENGINEER	

NOTES:
THE CHEMICAL SLUMP MAY BE INCREASED TO 6.5 INCHES WITH THE USE OF TYPE F CHEMICAL ADMIXTURES
ADMIXTURES SHALL BE ADJUSTED AT THE FIELD FOR DESIRED RESULTS WITHOUT EXCEEDING THE MANUFACTURER'S MAX RECOMMENDED DOSAGE.

PROJECT INFORMATION AND DIVISION APPROVAL

CONTRACTOR USE ONLY		DIVISION USE ONLY	
PROJECT No.:	COUNTY:	PLANT LOCATION:	CERTIFICATE TYPE
STRUCTURE		VENDOR CODE:	☐ NRMCA ☐ PCI
		APPROVED BY:	☐ NPCA
		DATE:	☐ CURRENT ☐ EXPIRED

Mobile County Public Works
Engineering Department

CONCRETE PLACEMENT
DAILY REPORT

MC-83
Revision: 2/26/08

Copies:
Project Engineer
Mobile County

Project Number: MCP-303-09
County: Mobile
Date: 10-15-09

Structure No. SP-1
Type Concrete AF-1A
Weather Conditions Cloudy

1. Temperature Range 80 °F **Low**, 65 °F **High**, Temperature of Mix 85 °F
2. Contractor: H. O. Weaver
3. Description Of Structures Sloped Paved Headwalls
4. Location Of Placement 18"(49+69 LT)+(49+67.5 RT), 29"x18"(49+41 RT)+(50+30 RT), 36"x23"(36+25 RT)+(36+93 R
5. Time Placement Started 11:50 (AM – PM) Completed 1:00 (AM – PM)
6. Cubic Yards Placed This Date 4.57 CUYD Total To Date 4.57/7.5 CUYD
7. Batches Delivered To Project This Date 1 @ 7.5
8. Method of curing Field

10. Field Tests

Time	Slump (inches)	Time	% Air Entrained
11:50	3 1/2"	11:55	2.1%

11. Cylinder Testing

Time	Cylinder No.	Type Of Structure & Stationing	Cylinder Break Age	Field Curing	
				Method	°F Temperature
12:00	1		7		
12:01	2		28		
12:02	3		28		

12. Remarks: 2.93 used for Testing + waste

John Smith
Geo Tech Inspector

Kenneth Ellison
Project Inspector

Project Engineer

T3826-08
ACI Certification Number

T2643-06

Example Only

Mobile County Public Works
Engineering Department

CONCRETE PLACEMENT
DAILY REPORT

MC-83
Revision: 2/26/08

Copies:
Project Engineer
Mobile County

SP-2 + MS-1 were poured from the same Load, same BMT-82 + BMT-122

Project Number: MCP 303-09
County: Mobile
Date: 10-16-09

Structure No. SP-2
Type Concrete AF-1A
Weather Conditions Cloudy

1. Temperature Range 64 °F **Low,** 73 °F **High,** Temperature of Mix 73 °F
2. Contractor: H.O. Weaver
3. Description Of Structures Sloped Paved Ditch + Sloped Paved Headwall
4. Location Of Placement Ditch (99+69 LT), 36" X 23" (10+50 LT)
5. Time Placement Started 12:00 (AM – PM) Completed 12:40 (AM – PM)
6. Cubic Yards Placed This Date 1.09 CUYD Total To Date 5.66/8.59 CUYD
7. Batches Delivered To Project This Date 1 @ 1.09 From 3.75 Delivered.
8. Method of curing Field

10. Field Tests

Time	Slump (inches)	Time	% Air Entrained
12:05	2 1/2"	12:10	5 %

11. Cylinder Testing

Time	Cylinder No.	Type Of Structure & Stationing	Cylinder Break Age	Field Curing	
				Method	°F Temperature
SEE TESTING on			MS-1	BMT-83	3-16-11

12. Remarks: USED 1.09 Cu.Yd. From MS-1 on 3-16-11

John Smith
Geo Tech Inspector

Kenneth Ellison
Project Inspector
T2643-06

Project Engineer

T3826-08
ACI Certification Number

Example Only

Mobile County Public Works
Engineering Department

CONCRETE PLACEMENT
DAILY REPORT

MC-83
Revision: 2/26/08

Copies:
Project Engineer
Mobile County

MS-1 and SP-2 were poured from same load.

Project Number: MCP-303-09
County: Mobile
Date: 10-16-19

Structure No. MS-1
Type Concrete AF-1A
Weather Conditions Cloudy

1. Temperature Range 64 °F **Low,** 73 °F **High,** Temperature of Mix 73 °F
2. Contractor: H.O. Weaver
3. Description Of Structures Collar 29"x18"
4. Location Of Placement 50+14 RT
5. Time Placement Started 12:00 (AM – PM) Completed 12:40 (AM – PM)
6. Cubic Yards Placed This Date 0.25 CUYD Total To Date 0.25/2.66 CUYD
7. Batches Delivered To Project This Date 1@ 2.66 from 3.75 Delievered.
8. Method of curing Field

10. Field Tests

Time	Slump (inches)	Time	% Air Entrained
12:05	2 1/2"	12:10	5 %

11. Cylinder Testing

Time	Cylinder No.	Type Of Structure & Stationing	Cylinder Break Age	Field Curing	
				Method	°F Temperature
12:15	4		7		
12:16	5		28		
12:17	6		28		

12. Remarks: 2.41 used for Testing + wasted

John Smith
Geo Tech Inspector

Kenneth Ellison
Project Inspector

Project Engineer

T3826-08
ACI Certification Number

T2643-06

Example Only

BC BAYOU CONCRETE

REMIT ADDRESS
P.O. BOX 1529
THEODORE, AL 36590

SP-1

BATCH PLANT
INVOICE

MSDS ON BACK
AL DISPATCH (251) 408-0700

Sloped paved headwalls
2-18", 2-24"x18", 2-36"x25"

Comments:
Concrete Tested ☐ Yes ☐ No
Cylinders Taken ☐ Yes ☐ No

eceipt of the concrete product shall subject purchaser/owner to the following:

MS OF ACCEPTANCE: a) volume of hardened concrete may be, or appear to be, less than anticipated due to waste and spillage, over-excavation, spreading forms, loss of entrained air, or settlement of wet mixture one of which are producer's responsibility; b) concrete strength guarantee per ASTM C94 is not effective unless field sampling is done per ASTM C172 and C31 and laboratory testing fully complies with ASTM C39 a 77; c) trucks not permitted beyond curb line except upon owner or contractor's authorization as shown by signature below; and purchaser or owner's agent indemnifies and holds supplier harmless from any and all dama may occur to owner's property; d) it is the responsibility of the purchaser to provide access to the point of delivery suitable for the vehicle to traverse under its own power; and all orders are accepted subject to t ondition. Any wrecker expense and delivery charge incurred will be borne by the purchaser.

TION: Contains Portland Cement. Product may cause skin irritation. Avoid eye contact and direct skin contact. Keep out of Reach of Children. Use only as intended.

Received by X _____ OWNER OR OWNER'S AGENT

PRODUCER NOT RESPONSIBLE FOR COLOR, FINISH, HARDNESS, CRACKING OR CONCRETE POURED ABOVE A 5" SLUMP

CUSTOMER NO. 222150

LEAVE PLANT	ARRIVE JOB SITE	START DISCHARGE	FINISH DISCHARGE	ARRIVE PLANT
1132	1151			

PLANT	MIX NUMBER	YARDS	TRUCK NUMBER	DRIVER	TIME	DATE	TICKET NO.
73	MD66CFA	7.50	9105	PERRY, MICHAEL	11:18 A	10/15/09	20593699

CUSTOMER NAME	DELIVERY ADDRESS	CUSTOMER P.O. NO.
ONCRETE SERVICES, INC.	HALF MILE RD WEST OF	SIMAA-STPAA-7615
4.00	IRV. BLB HWY	PRODUCT CODE / JOB NO.

YARDS	DESCRIPTION	YARDS ORDERED	YARDS DELIVERED	
7.50	AFIA	7.50	7.50	MD66CFA

QUANTITY	PRODUCT NUMBER	DESCRIPTION	PRICE	AMOUNT
00 yd	MD66CFA	AFIA		
00 ea	ECF00000	FUEL CHARGE		
			3 1/2	0
			2.1/2	
			25	

WATER ADDED AT CUSTOMER'S REQUEST
_____ gals. to full load
_____ gals. to 2/3 load
_____ gals. to 1/3 load
Sig. of Rec.- Water Added

TEST CYLINDERS MADE: 238789

SUB TOTAL	TAX %	PREV. TOTAL	TAX TOTAL	GRAND TOTAL

BC BAYOU CONCRETE

REMIT ADDRESS
P.O. BOX 1529
THEODORE, AL 36590

BATCH PLANT INVOICE

MS-2
SP-2

1-Collar 50+14 RT
Slope Paved Ditch 49+69 LT
36x23 PET 10+50

MSDS ON BACK

AL DISPATCH (251) 408-0700

Comments:

Concrete Tested ☒ Yes ☐ No
Cylinders Taken ☒ Yes ☐ No

...pt of the concrete product shall subject purchaser/owner to the following:

...'S OF ACCEPTANCE: a) volume of hardened concrete may be, or appear to be, less than anticipated due to waste and spillage, over-excavation, spreading forms; loss of entrained air, or settlement of wet mixtures ... of which are producer's responsibility; b) concrete strength guarantee per ASTM C94 is not effective unless field sampling is done per ASTM C172 and C31 and laboratory testing fully complies with ASTM C39 and ...177; c) trucks not permitted beyond curb line except upon owner or contractor's authorization as shown by signature below; and purchaser or owner's agent indemnifies and holds supplier harmless from any and all damages ...ay occur to owner's property; d) It is the responsibility of the purchaser to provide access to the point of delivery suitable for the vehicle to traverse under its own power, and all orders are accepted subject to this ...ion. Any wrecker expense and delivery charge incurred will be borne by the purchaser.

...ION: Contains Portland Cement. Product may cause skin irritation. Avoid eye contact and direct skin contact. Keep out of Reach of Children. Use only as intended.

Received by X [signature]
OWNER OR OWNER'S AGENT

PRODUCER NOT RESPONSIBLE FOR COLOR, FINISH, HARDNESS, CRACKING OR CONCRETE POURED ABOVE A 5" SLUMP.

CUSTOMER NO. 220150

LEAVE PLANT	ARRIVE JOB SITE	START DISCHARGE	FINISH DISCHARGE	ARRIVE PLANT
		17:10		

PLANT	MIX NUMBER	YARDS	TRUCK NUMBER	DRIVER	TIME	DATE	TICKET NO.
73	MD660FA	3.75	9119	WILLIAMS, RASHA	11:12 A	10/16/09	20093723

CUSTOMER NAME	DELIVERY ADDRESS	CUSTOMER P.O. NO.
...ONCRETE SERVICES, INC. ...00	HALF MILE WEST OF IRV. BLB. HWY (Collar 50+14 RT)	STMAA-STRAA77615

PRODUCT CODE	JOB NO.

YARDS	DESCRIPTION	YARDS ORDERED	YARDS DELIVERED	
...3.75	AF1A	3.75	3.75	MD660FA

QUANTITY	PRODUCT NUMBER	DESCRIPTION	PRICE	AMOUNT
...2.75 yd	MD660FA	AF1A	9.60	
...00 ea	ECF00000	FUEL CHARGE		
		1.63 40 washed		
		1.09 40		
		1.09 40		

WATER ADDED AT CUSTOMER'S REQUEST
... gals. to full load
... gals. to 2/3 load
... gals. to 1/3 load
Sig. of Rec.- Water Added

TEST CYLINDERS MADE

SUB-TOTAL	TAX %	PREV. TOTAL	TAX TOTAL	GRAND TOTAL

...238812

Supplemental #1

Slope Paving
614A-000

Drawing	Shape	Calculations		Total Per Page
	A	[(((6.8 FT + 5.8 FT) / 2) x 6.2 FT) x 0.33] / 27 = 0.477	CU.YD.	
1	B	[(2.1 FT x 4 FT x 0.5) x 0.33] / 27 = 0.051	CU.YD.	
	C	[(1.5 FT x 4 FT x 0.5) x 0.33] / 27 = 0.036	CU.YD.	0.564 CU.YD.
	D	[(((1 FT + 4.8 FT) / 2) x 4 FT) x 0.33] / 27 = 0.141	CU.YD.	
	E	[(((4.8 FT + 4 FT) / 2) x 15.2 FT) x 0.33] / 27 = 0.817	CU.YD.	
2	F	[(1.85 FT x 10.5 FT x 0.5) x 0.33] / 27 = 0.118	CU.YD.	
	T,W. F	(7 FT x 1.5 FT) x 1.0] / 27 = 0.388	CU.YD.	
	T,W. E	(1 FT x 1 FT) x 0.5] / 27 = 0.018	CU.YD.	1.482 CU.YD.
	G	(5 FT x 2.3 FT) x 0.33] / 27 = 0.140	CU.YD.	
3	H	[(2 FT x 2 FT x 0.5) x 0.33] / 27 = 0.024	CU.YD.	
	I	[(2 FT x 1.5 FT x 0.5) x 0.33] / 27 = 0.018	CU.YD.	0.182 CU.YD.

TOTAL THIS PAGE 2.228 CU.YD.

TOTAL SLOPE PAVING 2.23 CU.YD.

SLOPE PAVING
614A-000
DRAWING 3

N.T.S.

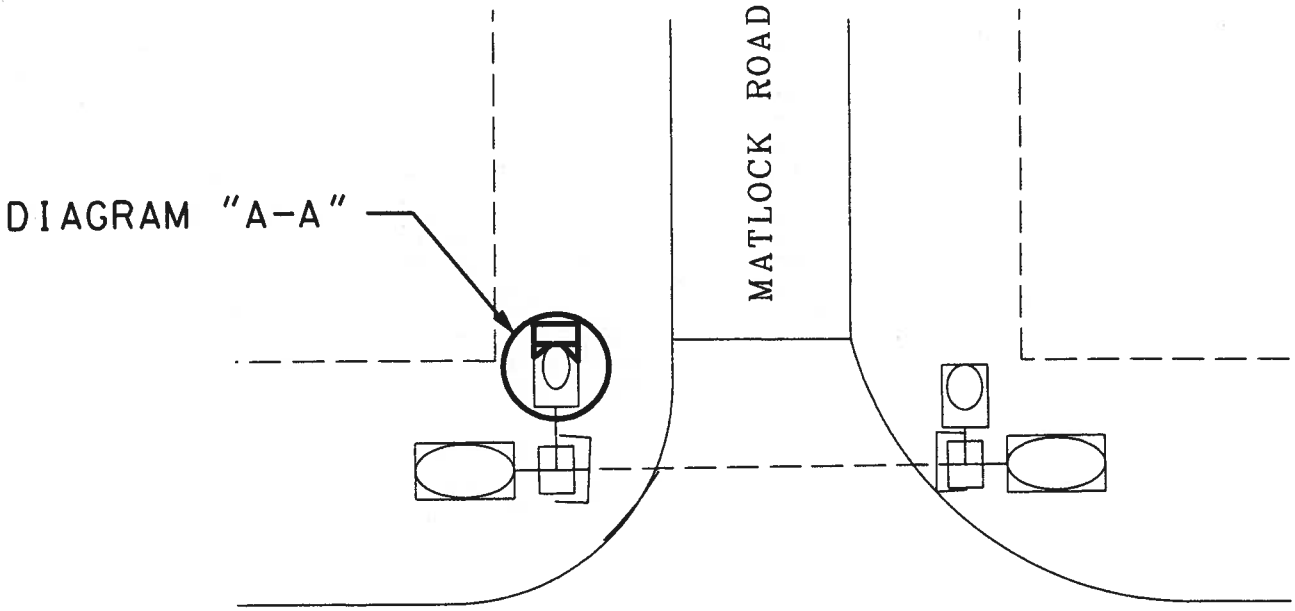

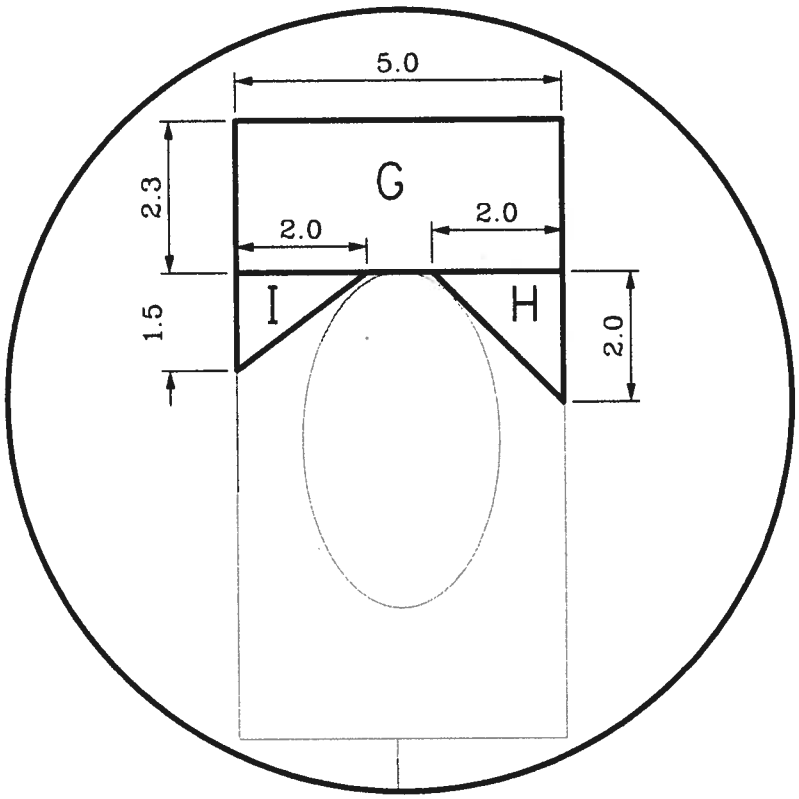

SLOPE PAVING 4"=0.33' THICK

DIAGRAM "A-A"

N.T.S.

Minor Structure Concrete
620A-000

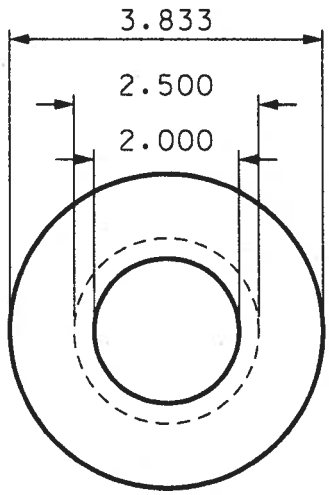

MINOR STRUCTURE CONCRETE

29" x 18" ROADWAY PIPE COLLAR

$A = 3.1416 \times (3.833/2)^2 = 11.539$

$B = 3.1416 \times (2.500/2)^2 = 4.908$

$A - B = 11.539 - 4.908 = 6.631$

6.631 / 27 = <u>0.25 CU.YD.</u>